GARMIN

GTX 3XX Part 23 AML STC
Installation Manual

190-00734-10 October 2022 Revision 16

© 2022 Garmin International, Inc., or its subsidiaries
All Rights Reserved

Except as expressly provided herein, no part of this manual may be reproduced, copied, transmitted, disseminated, downloaded, or stored in any storage medium for any purpose without the express prior written consent of Garmin. Garmin hereby grants permission to download a single copy of this manual and of any revision to this manual onto a hard drive or other electronic storage medium to be viewed and to print one copy of this manual or of any revision hereto, provided that such electronic or printed copy of this manual or revision must contain the complete text of this copyright notice and provided further that any unauthorized commercial distribution of this manual or any revision hereto is strictly prohibited.

© 2022 Bluetooth® word mark and logos are registered trademarks owned by Bluetooth SIG, Inc. and any use of such marks by Garmin is under license. Other trademarks and tradenames are those of their respective owners.

CherryMAX® is a registered trademark of Cherry Aerospace Fasteners, a division of Textron, Inc.

Garmin® is a registered trademark of Garmin International or its subsidiaries. Connext™, GDU™, and GTN™ are trademarks of Garmin International or its subsidiaries. These trademarks may not be used without the express permission of Garmin.

© 2022 SiriusXM Radio Inc. Sirius, XM, and all related marks and logos are trademarks of SiriusXM Radio Inc. All other marks and logos are property of their respective owners. All rights Reserved.

Skywatch® is a registered trademark of L-3 Communications.

Windows® is a registered trademark of Microsoft Corporation in the United States and other countries.

All other product or company names that may be mentioned in this publication are trade names, trademarks, or registered trademarks of their respective owners.

At Garmin, we value your opinion. For questions or comments about this manual, please reference the following contact information.

For information regarding the Aviation Limited Warranty, refer to Garmin's website.

Garmin International, Inc.
1200 E. 151st Street
Olathe, KS 66062 USA
Telephone: (913) 397-8200
Aviation Dealer Technical Support Line (Toll Free): (888) 606-5482
www.garmin.com

Garmin (Europe) Ltd.
Liberty House
Bull Copse Road
Hounsdown Business Park
Southampton, SO40 9LR, UK
Telephone: +44 (0) 23 8052 4000
Fax: +44 (0) 23 8052 4004
Aviation Support: +44 (0) 37 0850 1243

Garmin AT, Inc.
2345 Turner Road SE
Salem, Oregon 97302
Telephone: (503) 581-8101

INFORMATION SUBJECT TO EXPORT CONTROL LAWS

This document may contain information that is subject to the Export Administration Regulations (EAR) issued by the United States Department of Commerce (15 CFR, Chapter VII, Subchapter C) and may not be exported, released, or disclosed to foreign nationals inside or outside of the United States without first obtaining an export license.

The information in this document is subject to change without notice. For updates and supplemental information regarding the operation of Garmin products, visit flyGarmin.com.

Software License Notification

AES Encryption

The product may include AES file encryption software, © 2002 DR. Brian Gladman, subject to the following license:

The free distribution and use of this software in both source and binary form is allowed (with or without changes) provided:

- Distributions of this source code include the above copyright notice, this list of conditions, and the following disclaimer.
- Distribution in binary form include the above copyright notice, this list of conditions, and the following disclaimer in the documentation and/or other associated materials.
- The copyright holder's name is not used to endorse products built using this software without specific written permission.

Alternatively, provided this notice is retained in full, this product may be distributed under the terms of the GNU General Public License (GPL) in which case the provisions of the GPL apply instead of those given above.

Disclaimer

The AES file encryption software is provided "as is" with no explicit or implied warranties in respect of its properties, including, but not limited to, correctness and/or fitness for purpose.

SOFTWARE LICENSE AGREEMENT FOR GARMIN AVIATION PRODUCTS

The software embedded in your Garmin product (the "Licensed Software") is owned by Garmin International, Inc. ("Garmin" or "us"). The Licensed Software is protected under copyright laws and international copyright treaties. The Licensed Software is provided under this Software License Agreement (hereinafter the "Agreement") and is subject to the following terms and conditions which are agreed to by End User ("Licensee", "you" or "your"), on the one hand, and Garmin and its licensors and affiliated companies of Garmin and its licensors, on the other hand. The Licensed Software is licensed, not sold, to you. Garmin and Licensee may be referred to individually as a "Party" or jointly as the "Parties."

IMPORTANT: CAREFULLY READ THIS ENTIRE AGREEMENT BEFORE USING THIS PRODUCT. INSTALLING, COPYING, OR OTHERWISE USING THIS PRODUCT INDICATES YOUR ACKNOWLEDGMENT THAT YOU HAVE READ THIS AGREEMENT AND AGREE TO ITS TERMS AND CONDITIONS. IF YOU DO NOT AGREE TO THESE TERMS AND CONDITIONS, YOU MAY NOT USE THIS PRODUCT.

1. **Definitions**. The following capitalized terms shall have the meanings set forth below:
   a. "Device" means any Garmin device that is delivered by or on behalf of Garmin to Licensee onto which the Licensed Software is installed.
   b. "Documentation" means Gamin's then-current instructional, technical or functional documentation relating to the Devices or Licensed Software which is delivered or made available by Garmin in connection with this Agreement.
   c. "Licensed Software" means the software in binary executable form that is embedded in the Devices and/or made available for use on the Devices via a software loader card.
   d. "Permitted Purpose" means operating and using the Device on which the Licensed Software is installed for the Device's intended use.

2. **License**.
   a. License Grant. Subject to the terms and conditions of this Agreement and Licensee's compliance with the terms and conditions of this Agreement, Garmin hereby grants to Licensee a limited, royalty-free, non-exclusive, non-sublicenseable, non-transferable and revocable right and license to use and perform the Licensed Software as installed on the Devices and the Documentation solely for the Permitted Purpose and only during the term of this Agreement, provided that the Licensed Software may only be used by Licensee on Devices on which the Licensed Software has been installed or otherwise made available by Garmin.
   b. Reservation of Rights. Garmin retains exclusive ownership of all right, title and interest in and to the Licensed Software and Documentation. All of Gamin's rights in and to the Licensed Software and Documentation not expressly licensed to Licensee under Section 2.1 are expressly reserved for Garmin. Nothing contained in this Agreement shall be construed as conferring by implication, acquiescence, or estoppel any license or other right upon Licensee. Without limiting the foregoing, the Parties acknowledge and agree that this Agreement grants Licensee a license of the Licensed Software under the terms of Section 2.1, and shall not in any manner be construed as a sale of the Licensed Software or any rights in the Licensed Software.

3. **Restrictions; Protection and Third Party Devices**.
   a. Prohibited Uses. Licensee shall not, shall not attempt to and shall not permit any third party to: (a) sublicense, lease, loan, sell, resell, market, transfer, rent, disclose, demonstrate, or distribute the Licensed Software or Documentation to any third party; (b) uninstall the Licensed Software from the Device on which it was originally installed; (c) make any use of or perform any acts with respect to the Licensed Software or Documentation other than as expressly permitted in accordance with the terms of this Agreement; (d) use the Licensed Software or Documentation in any manner that violates any applicable law; (e) reproduce or copy the Licensed Software; (f) modify, adapt, alter, translate, port, create derivative works of, reverse engineer, decompile or disassemble the Licensed Software or Documentation or otherwise derive the source code or other proprietary information or trade secrets from the Licensed Software; (g) remove, alter, or obscure any proprietary notices from the Licensed Software or Documentation; (h) use the Licensed Software or Documentation to provide services to third parties (such as business process outsourcing, service bureau applications or third party training); (i) use the Licensed Software on any equipment, hardware or device other than a Device; or (j) export, re-export or otherwise distribute, directly or indirectly, the Licensed Software or Documentation to a jurisdiction or country to which the export, re-export or distribution of such Licensed Software or Documentation is prohibited by applicable law.

b. Protection of Software and Documentation. Licensee shall use its best efforts to protect the Licensed Software and Documentation from unauthorized access, distribution, modification, display, reproduction, disclosure or use with at least the same degree of care as Licensee normally uses in protecting its own software and documentation of a similar nature from unauthorized access, distribution, modification, display, reproduction, disclosure or use. Licensee shall limit access to the Licensed Software and Documentation to only those employees of Licensee who require access to the Licensed Software or Documentation for the Permitted Purpose and who have been made aware of the restrictions set forth in this Agreement. Licensee shall take prompt and appropriate action to prevent unauthorized use or disclosure of the Licensed Software and Documentation.

4. **Term and Termination**.

a. Term. The term of this Agreement shall commence on the Effective Date, and shall continue in perpetuity thereafter, unless terminated earlier as provided in this Section 4.

b. Termination by Garmin. Garmin may immediately terminate this Agreement upon written notice to Licensee if Licensee commits a material breach of this Agreement or breaches a material term of this Agreement.

c. Effect of Termination. Upon any termination of this Agreement for any Party: (a) Licensee shall immediately cease all use of the Licensed Software and Documentation; (b) all rights and licenses granted to Licensee to the Licensed Software and Documentation and Gamin's related obligations shall immediately terminate; and (c) Sections 4.3, 5 and 6 shall survive.

5. **Disclaimer; Limitations of Liability; Indemnity**.

a. DISCLAIMER. TO THE MAXIMUM EXTENT PERMITTED BY APPLICABLE LAW, THE LICENSED SOFTWARE AND DOCUMENTATION (INCLUDING ANY RESULTS TO BE OBTAINED FROM ANY USE OF THE LICENSED SOFTWARE AND DOCUMENTATION) ARE PROVIDED “AS IS” AND “AS AVAILABLE” WITH NO WARRANTIES, GUARANTEES OR REPRESENTATIONS AND NEITHER GARMIN NOR ITS AFFILIATES MAKE ANY REPRESENTATION, WARRANTY OR GUARANTEE, STATUTORY OR OTHERWISE, UNDER LAW OR FROM THE COURSE OF DEALING OR USAGE OF TRADE, EXPRESS OR IMPLIED, INCLUDING ANY WARRANTIES OF MERCHANTABILITY, FITNESS FOR A PARTICULAR PURPOSE, NON-INTERFERENCE, NON-INFRINGEMENT, TITLE, OR SIMILAR, UNDER THE LAWS OF ANY JURISDICTION. GARMIN DOES NOT WARRANT THAT THE LICENSED SOFTWARE OR DOCUMENTATION WILL MEET LICENSEE'S REQUIREMENTS OR THAT OPERATION OF THE SOFTWARE WILL BE UNINTERRUPTED OR ERROR FREE. LICENSEE ASSUMES THE ENTIRE RISK AS TO THE QUALITY AND PERFORMANCE OF THE LICENSED SOFTWARE AND DOCUMENTATION. THE LICENSED SOFTWARE IS NOT INTENDED FOR USE IN ANY NUCLEAR, MEDICAL, OR OTHER INHERENTLY DANGEROUS APPLICATIONS, AND GARMIN DISCLAIMS ALL LIABILITY FOR ANY DAMAGE OR LOSS CAUSED BY SUCH USE OF THE LICENSED SOFTWARE.

b. EXCLUSION OF DAMAGES; LIMITATION OF LIABILITY. NOTWITHSTANDING ANYTHING TO THE CONTRARY HEREIN, TO THE MAXIMUM EXTENT PERMITTED BY APPLICABLE LAW, UNDER NO CIRCUMSTANCES AND REGARDLESS OF THE NATURE OF ANY CLAIM SHALL GARMIN BE LIABLE TO LICENSEE FOR AN AMOUNT IN EXCESS OF USD $100, OR BE LIABLE IN ANY AMOUNT FOR ANY SPECIAL, INCIDENTAL, CONSEQUENTIAL, PUNITIVE OR INDIRECT DAMAGES, LOSS OF GOODWILL OR PROFITS, LIQUIDATED DAMAGES, DATA LOSS, COMPUTER FAILURE OR MALFUNCTION, ATTORNEYS' FEES, COURT COSTS, INTEREST OR EXEMPLARY OR PUNITIVE DAMAGES, ARISING OUT OF OR IN CONNECTION WITH THE USE OR PERFORMANCE OR NON-PERFORMANCE OF THE LICENSED SOFTWARE OR DOCUMENTATION, EVEN IF GARMIN HAS BEEN ADVISED OF THE POSSIBILITY OF SUCH LOSS OR DAMAGES.

c. Indemnity. Licensee shall indemnify, defend and hold Garmin and its affiliates harmless against any and all losses, claims, actions, causes of action, liabilities, demands, fines, judgments, damages and expenses suffered or incurred by Garmin or its affiliated companies in connection with: (a) any use or misuse of the Licensed Software or Documentation by Licensee or any third party in Licensee's reasonable control; or (b) Licensee's breach of this Agreement.

6. **General**.

a. No Devices or Services. Licensee acknowledges and agrees that nothing in this Agreement shall be construed as requiring Garmin to: (a) provide or supply the Devices or any other devices or hardware to Licensee; (b) grant any

licenses to any software other than the Licensed Software; or (c) provide any services, such as support, maintenance, installation or professional services for the Licensed Software.

b. Non-Exclusive. Each Party's rights and obligations under this Agreement are non-exclusive. Garmin is not precluded from marketing, licensing, providing, selling or distributing the Licensed Software or Documentation, or any other products, software, documentation or services, either directly or through any third party.

c. Assignment. Licensee may not assign this Agreement or any of its rights, interests or obligations hereunder without the prior written consent of Garmin. Any purported assignment in violation of this Section 6.3 shall be null and void. Subject to the foregoing, this Agreement shall be binding upon and shall inure to the benefit of the Parties and their respective successors and permitted assigns and transferees.

d. Feedback and Data. Licensee may from time to time provide feedback, comments, suggestions, questions, ideas, or other information to Garmin concerning the Licensed Software or Documentation or Gamin's products, services, technology, techniques, processes or materials ("Feedback"). Garmin may in connection with any of its products or services freely use, copy, disclose, license, distribute and otherwise exploit such Feedback in any manner without any obligation, payment, royalty or restriction whether based on intellectual property rights or otherwise.

e. Governing Law. The validity, interpretation and enforcement of this Agreement will be governed by the substantive laws, but not the choice of law rules, of the state of Kansas. This Agreement shall not be governed by the 1980 UN Convention on Contracts for the International Sale of Goods.

f. Legal Compliance. You represent and warrant that (i) you are not located in a country that is subject to a U.S. Government embargo, or has been designated by the U.S. Government as a "terrorist supporting" country, and (ii) you are not listed on any U.S. Government list of prohibited or restricted parties.

g. Injunctive Relief. The Parties acknowledge and agree that irreparable damage would occur if any provision of this Agreement was not performed in accordance with its specific terms or was otherwise breached and as such, the Parties will be entitled to an injunction or injunctions to prevent breaches of this Agreement and to enforce specifically the performance of the terms and provisions of this Agreement without proof of actual damages, this being in addition to any other remedy to which any Party is entitled at law or in equity.

h. Amendments and Waivers. This Agreement may be amended and any provision of this Agreement may be waived, provided that any such amendment or waiver will become and remain binding upon a Party only if such amendment or waiver is set forth in a writing by such Party. No course of dealing between or among any persons having any interest in this Agreement will be deemed effective to modify, amend or discharge any part of this Agreement or any rights or obligations of any Party under or by reason of this Agreement. No delay or failure in exercising any right, power or remedy hereunder will affect or operate as a waiver thereof; nor will any single or partial exercise thereof or any abandonment or discontinuance of steps to enforce such a right, power or remedy preclude any further exercise thereof or of any other right, power or remedy. The rights and remedies hereunder are cumulative and not exclusive of any rights or remedies that any Party would otherwise have.

i. Severability. The provisions of this Agreement will be severable in the event that for any reason whatsoever any of the provisions hereof are invalid, void or otherwise unenforceable, any such invalid, void or otherwise unenforceable provisions will be replaced by other provisions which are as similar as possible in terms to such invalid, void or otherwise unenforceable provisions but are valid and enforceable and the remaining provisions will remain valid and enforceable to the fullest extent permitted by applicable law, in each case so as to best preserve the intention of the Parties with respect to the benefits and obligations of this Agreement.

j. No Third-Party Beneficiaries. This Agreement is solely for the benefit of the Parties and does not confer on third parties any remedy, claim, reimbursement, claim of action or other right in addition to those existing without reference to this Agreement.

k. Entire Agreement. This Agreement shall constitute the entire agreement between Garmin and you with respect to the subject matter hereof and will supersede all prior negotiations, agreements and understandings of Garmin and you of any nature, whether oral or written, with respect to such subject matter.

l. Interpretation. In this Agreement: (a) headings are for convenience only and do not affect the interpretation of this Agreement; (b) the singular includes the plural and vice versa; (c) the words 'such as', 'including', 'particularly' and similar expressions are not used as, nor are intended to be, interpreted as words of limitation; (d) a reference to a person includes a natural person, partnership, joint venture, government agency, association, corporation or other body corporate; a thing includes a part of that thing; and a party includes its successors and permitted assigns; and (e) no rule of construction applies to the disadvantage of a Party because that Party was responsible for the preparation of this Agreement. Any translation of this Agreement from English is provided as a convenience only. If this Agreement is translated into a language other than English and there is a conflict of terms between the English version and the other language version, the English version will control.

RECORD OF REVISIONS

Revision	Rev Date	Description
14	01/30/20	Removed Diversity and Enhanced Surveillance statements from the Installation Limitations section and added clarifications to previously approved installations.
15	06/14/21	Approved GI 275 as control source for GTX 345. Minor corrections.
16	10/10/22	Minor change to add new GTX part numbers.

CURRENT REVISION DESCRIPTION

Section	Description
1.3.1	Added new part numbers to Table 1-2 GTX 3X5/3X5R Unit List.
9.1	Updated AFMS directions to include new part numbers.
10.2.4	Corrected error in Table 10-11 GTX 3X5 Power Configuration and Power Control Functions.
Appendix A	Updated Table A-1 Part Numbers (Panel Mount) to include new part numbers.
	Updated Table A-2 Part Numbers (Remote Horizontal Mount) to include new part numbers.
	Updated Table A-3 Part Numbers (Remote Vertical Mount) to include new part numbers.
	Updated Table A-4 Part Numbers (Remote G1000 Mount) to include new part numbers.
C.7	Corrected GTX 345 format to “Garmin MX Format 3” for G950/G1000 RS-422 connections.

DEFINITIONS OF WARNINGS, CAUTIONS, AND NOTES

WARNING

*A **Warning** means that injury or death is possible if the instructions are not obeyed.*

CAUTION

*A **Caution** means that damage to the equipment is possible.*

NOTE

*A **Note** provides more information.*

WARNING

This product, its packaging, and its components contain chemicals known to the State of California to cause cancer, birth defects, or reproductive harm. This notice is being provided in accordance with California's Proposition 65. If you have any questions or would like more information, please refer to our website at www.garmin.com/prop65.

WARNING

Perchlorate Material – special handling may apply.
Refer to www.dtsc.ca.gov/hazardouswaste/perchlorate.

CAUTION

GTX 3X5 units have a special anti-reflective coated display that is sensitive to waxes and abrasive cleaners. CLEANERS THAT HAVE AMMONIA WILL CAUSE DAMAGE TO THE ANTI-REFLECTIVE COATING. Clean the display with a clean, lint-free cloth and a cleaner that is safe for anti-reflective coatings.

NOTE

All screen shots used in this document are current at the time of publication. Screen shots are intended to provide visual reference only. All information depicted in screen shots, such as software file names, versions, and part numbers, is subject to change and may not be up-to-date.

TABLE OF CONTENTS

1 GENERAL DESCRIPTION 1-1
1.1 Introduction 1-2
1.2 Terminology 1-3
1.3 Scope 1-5
1.4 System Overview 1-8
1.5 Technical Specifications 1-24
1.6 Reference Documentation 1-25
1.7 STC Permission 1-27

2 LIMITATIONS 2-1
2.1 Operational Limitations 2-2
2.2 Installation Limitations 2-3

3 INSTALLATION OVERVIEW 3-1
3.1 Pre-Installation Information 3-3
3.2 Pre-Installation Checklist 3-4
3.3 Installation Considerations 3-6
3.4 Minimum System Configurations 3-8
3.5 Wireless Interface to PED (GTX 345/345R Only) 3-10
3.6 External Sensors, Devices, and Interface Considerations 3-11
3.7 Placards/Labels 3-19
3.8 Switches and Annunciators 3-19
3.9 Cooling 3-19
3.10 Transponder Antenna Considerations 3-20
3.11 GPS Antenna Considerations (GTX 3X5 with SBAS/GPS) 3-22
3.12 General Installation Practices 3-26
3.13 Cable and Wiring 3-27
3.14 General Electrical Bonding 3-28
3.15 Electrical Load Analysis 3-34

4 MATERIALS 4-1
4.1 Garmin Available Installation Materials 4-2
4.2 Installation Materials Not Supplied 4-3
4.3 Crimping Tools 4-4
4.4 Test Equipment 4-4

5 INSTALLATION 5-1
5.1 General Installation Requirements 5-2
5.2 Remote Mount 5-9
5.3 General Electrical Installation 5-21
5.4 Connector and Backplate Assembly 5-25
~~5.5 GAE and Configuration Module Installation ..... 5-35~~
5.6 GTX Installation 5-38

6 SOFTWARE LOADING 6-1
6.1 GTX 33/330 6-2
~~6.2 GTX 3X5 ..... 6-4~~

7 POST-INSTALLATION CONFIGURATION 7-1
7.1 System Inspection and Configuration Overview 7-2
~~7.2 GTX 3X5 Panel Mount Configuration ..... 7-4~~

~~7.3 GTX 3X5 Remote Configuration ..... 7-24~~
~~7.4 GTX 3X5 Configuration with G950/G1000 ..... 7-33~~
7.5 GTX 33/330 Configuration 7-53

8 OPERATION/PERFORMANCE CHECKOUT 8-1
8.1 Ground Checks - Interfaces (Configuration Mode) 8-2
8.2 Ground Checks - Interfaces (Normal Mode) 8-6
8.3 Ground Checks - Performance 8-11

9 DOCUMENTATION CHECKS 9-1
9.1 AFMS Completion 9-2
9.2 Airplane Flight Manual Supplement 9-5
9.3 Weight and Balance 9-6

10 CONNECTOR PINOUT 10-1
10.1 GTX 33/330 10-2
~~10.2 GTX 3X5 ..... 10-7~~

11 TROUBLESHOOTING 11-1

APPENDIX A DRAWINGS A-1

APPENDIX B INTERCONNECT DRAWINGS B-1

APPENDIX C EQUIPMENT COMPATIBILITY AND CONFIGURATION C-1
C.1 Remote Control C-3
C.2 GPS Source C-5
C.3 Altitude Source C-7
C.4 Radar Altimeters C-10
C.5 Heading Source C-11
C.6 Audio Panels C-13
C.7 ADS-B Traffic and Weather Display C-14
C.8 TIS-A Traffic Display C-16
C.9 Traffic Sensors C-17
C.10 Bluetooth C-18
C.11 UAT Out Control C-18

LIST OF FIGURES

Figure 1-1 GTX 330 or GTX 330D Interface Summary 1-10
Figure 1-2 GTX 330/330D Front Panel 1-11
~~Figure 1-3 GTX 33 or GTX 33D Interface Summary ..... 1-13~~
~~Figure 1-4 GTN 6XX Transponder Control ..... 1-14~~
~~Figure 1-5 GTN 7XX Transponder Control ..... 1-14~~
~~Figure 1-6 GNS 480 Transponder Control ..... 1-14~~
~~Figure 1-7 GTX 335/345 Front Panel ..... 1-15~~
~~Figure 1-8 GTX 335/335D/335R/335DR Interface Summary ..... 1-18~~
~~Figure 1-9 GTX 345/345D/345R/345DR Interface Summary ..... 1-20~~
~~Figure 1-10 GTX 3X5R/3X5DR Specific G950/G1000 Interface Summary ..... 1-22~~
~~Figure 1-11 GAE for GTX 3X5 Use Only ..... 1-23~~
~~Figure 3-1 Test Harness for Bluetooth Verification ..... 3-7~~
~~Figure 3-2 GPS Antenna Location (GTX 3X5 with SBAS/GPS) ..... 3-24~~
Figure 3-3 Electrical Bond Preparation - Nut Plate 3-30
Figure 3-4 Electrical Bond Preparation - Bolt/Nut Joint 3-30
Figure 3-5 Electrical Bond Preparation - Terminal Lug 3-30
Figure 3-6 Bonding Strap 3-31
Figure 3-7 Transponder Antenna Minimum Ground Plane Radius 3-32
Figure 3-8 GPS/SBAS Antenna Minimum Ground Plane Radius 3-33
Figure 3-9 Ammeter Placement for Current Measurements 3-36
Figure 3-10 GTX Electrical Load Tabulation Form 3-38
Figure 3-11 GTX Electrical Load Tabulation Form (Sample) 3-40
Figure 3-12 Battery Capacity Analysis Example 3-42
Figure 5-1 Typical GTX Rack Installation Example 5-3
Figure 5-2 Panel Cutout Detail for GTX 330/330D and GTX 3X5 5-4
Figure 5-3 Avionics Rack Mounting Rail Example 5-5
Figure 5-4 Aluminum Tape Joint 5-6
Figure 5-5 Fiberglass Insulation for Carbon Fiber Material 5-7
Figure 5-6 Grounding to Instrument Panel with Aluminum Tape and Grounding Strap 5-7
Figure 5-7 Remote Mount GTX Example 5-8
Figure 5-8 Shelf in Aircraft with Tubular Truss Airframe Example 5-10
Figure 5-9 GTX 33/33D Installation Example 5-12
Figure 5-10 GTX 3X5 Standard Mount, Installation Example 5-13
Figure 5-11 General Bracket Design 5-14
Figure 5-12 Vertical Remote Mount Installation Example 5-15
Figure 5-13 Transponder Remote Mount Bracket Example 5-16
Figure 5-14 GTX 3X5R Remote Mount Installation Example 5-17
Figure 5-15 G1000 Remote Mount Installation Example 5-18
Figure 5-16 G1000 Remote Mount Installation, View Looking Forward 5-19
Figure 5-17 External Traffic Annunciator 5-20
Figure 5-18 Shielded Wire Preparation 5-23
Figure 5-19 GTX 330/330D Backshell Assembly 5-26
~~Figure 5-20 GTX 33/33D Connector and Backshell Assembly ..... 5-28~~
~~Figure 5-21 GTX 3X5 Connector Kits ..... 5-30~~
~~Figure 5-22 GTX 3X5 with GPS Backplate Assembly (P/N 011-02976-01) ..... 5-31~~
~~Figure 5-23 GTX 3X5 with GPS Backplate Assembly (P/N 011-02976-11) ..... 5-32~~
~~Figure 5-24 GTX 3X5D with Backplate Assembly (P/N 011-04340-02) ..... 5-33~~
~~Figure 5-25 GTX 3X5DR with Backplate Assembly (P/N 011-04340-10) ..... 5-34~~

Figure 5-26 Configuration Module Assembly 5-35
~~Figure 5-27 GAE Assembly ..... 5-37~~
Figure 6-1 Software Update Connection 6-2
~~Figure 6-2 GTN 6XX/7XX System Page ..... 6-3~~
Figure 6-3 GTX 330 Start-Up Screen 6-3
Figure 6-4 GTX 330 Product Data Page 6-3
~~Figure 6-5 GTX 3X5 Install Tool Software Upload Page ..... 6-4~~
~~Figure 6-6 GTX 3X5 Start-Up Screen ..... 6-5~~
~~Figure 6-7 GTX 3X5 Product Data Page ..... 6-5~~
~~Figure 6-8 Specific G950/G1000 System Status Page ..... 6-6~~
~~Figure 6-9 GTN 6XX/7XX System Page ..... 6-6~~
Figure 7-1 Audio Page 1 7-4
Figure 7-2 Audio Page 2 7-5
Figure 7-3 Audio Page 3 7-5
Figure 7-4 RS-232 Interface Page 7-6
Figure 7-5 RS-422 Output Page 7-7
Figure 7-6 A429 In Page 7-8
Figure 7-7 A429 Output Page 7-9
Figure 7-8 HSDB Interface Page 7-9
Figure 7-9 Discrete In Page 7-10
Figure 7-10 Discrete Out Page 7-11
Figure 7-11 Unit Page 7-12
Figure 7-12 Display Pages 7-13
Figure 7-13 Sensor Page 7-14
Figure 7-14 Internal Alt Encoder 7-16
Figure 7-15 Internal Alt Encoder Adjustment 7-17
Figure 7-16 Yaw Orientation Measurements 7-19
Figure 7-17 Diagnostics Page 7-23
Figure 7-18 USB-A and USB-B Connectors 7-24
Figure 7-19 Audio Configuration Page 7-25
Figure 7-20 Interface Configuration Page (Serial) 7-26
Figure 7-21 Interface Configuration Page (A429) 7-26
Figure 7-22 Interface Configuration Page (Discrete) 7-27
Figure 7-23 Interface Configuration Page (HSDB) 7-27
Figure 7-24 Unit Configuration Page 7-28
Figure 7-25 Display Configuration Page 7-29
Figure 7-26 Sensor Configuration Page (GAE) 7-30
Figure 7-27 Sensor Configuration Page (GPS) 7-30
Figure 7-28 Sensor Configuration Page (Internal AHRS) 7-31
Figure 7-29 Sensor Configuration Page (Additional Sensors) 7-31
Figure 7-30 Airframe Configuration Page 7-32
Figure 7-31 Aircraft Configuration Page 7-32
~~Figure 7-32 GTX 335R System Upload ..... 7-34~~
~~Figure 7-33 GTX 335R System Upload Item ..... 7-34~~
~~Figure 7-34 GTX 335R GIA 1 RS-232 / ARINC 429 Configuration ..... 7-35~~
~~Figure 7-35 GTX 335R GIA 2 RS-232 / ARINC 429 Configuration ..... 7-35~~
~~Figure 7-36 GTX 335R XPDR RS-232 / ARINC 429 Configuration ..... 7-36~~
~~Figure 7-37 GTX 335R XPDR Configuration ..... 7-36~~
~~Figure 7-38 GTX 335R System Status ..... 7-37~~
Figure 7-39 RS-232/ARINC 429 CONFIG TAS/TCAS Traffic System Active 7-39

Figure 7-40 RS-232/ARINC 429 CONFIG TAS/TCAS Traffic System Off 7-39
Figure 7-41 GIA2 I/O Configuration TAS/TCAS Mode Discrete Active 7-40
Figure 7-42 GIA2 I/O Configuration TAS/TCAS Mode Discrete Off 7-40
Figure 7-43 System Configuration Unchecked GTS 7-42
Figure 7-44 HSDB System Data Paths Unchecked GTS 7-42
Figure 7-45 Aircraft Configuration 7-42
Figure 7-46 GTX 345R System Upload Item 7-43
~~Figure 7-47 GTX 345R GIA 2 RS-232 / ARINC 429 Configuration ..... 7-44~~
~~Figure 7-48 GTX 335R GIA 2 RS-232 / ARINC 429 Configuration ..... 7-44~~
~~Figure 7-49 GTX 345R GIA 2 RS-485 Configuration ..... 7-45~~
~~Figure 7-50 GTX 345R GIA 2 Discrete Out I/O Configuration ..... 7-45~~
~~Figure 7-51 GTX 345R XPDR RS-232 / ARINC 429 Configuration ..... 7-46~~
~~Figure 7-52 GTX 345R Transponder Configuration ..... 7-46~~
Figure 7-53 GMA Audio Configuration 7-47
~~Figure 7-54 GTX 345R System Status ..... 7-47~~
Figure 7-55 Dual GTX 3X5 System Upload Item 7-48
Figure 7-56 GTX 345R GIA1 RS-232/ARINC 429 Configuration 7-49
Figure 7-57 GTX 335R GIA 2 RS-232 / ARINC 429 Configuration 7-49
Figure 7-58 GTX 345R GIA 2 RS-485 Configuration 7-50
Figure 7-59 GTX 345R GIA 2 Discrete Out I/O Configuration 7-50
Figure 7-60 DUAL GTX 3X5R XPDR RS-232 / ARINC 429 Configuration 7-51
Figure 7-61 DUAL GTX 3X5 TRANSPONDER Configuration 7-51
Figure 7-62 GTX 3X5 System Status 7-52
Figure 7-63 Jump To Page 7-54
Figure 7-64 Audio Mode First Page 7-54
Figure 7-65 Audio Mode Second Page 7-54
Figure 7-66 Traffic Messages Page 7-55
Figure 7-67 Display Mode Page 7-56
Figure 7-68 Display Backlight Page 7-56
Figure 7-69 Key Lighting Page 7-57
Figure 7-70 Contrast Mode Page 7-59
Figure 7-71 VFR Key Configuration Page 7-59
Figure 7-72 ARINC 429 Input First Page 7-60
Figure 7-73 ARINC 429 Input Second Page 7-60
Figure 7-74 ARINC 429 Output Page 7-61
Figure 7-75 RS-232 Input-Output Page 7-62
Figure 7-76 Configuration Page - First 7-64
Figure 7-77 Configuration Page - Second 7-65
Figure 7-78 Temperature Page 7-66
Figure 7-79 Mode S US Tail # Page 7-67
Figure 7-80 Mode S Address HEX Page 7-67
Figure 7-81 Flight ID Pwr-Up Entry Page 7-68
Figure 7-82 Power-Up Config Entry Page 7-68
Figure 7-83 Power-Up Same as Tail Page 7-68
Figure 7-84 GPS Configuration Page 7-69
Figure 7-85 A/C Type Page 7-69
Figure 7-86 Aircraft Size Page 7-70
Figure 7-87 ADS-B Page 7-71
Figure 7-88 EHS Page 7-71
Figure 8-1 Example EMC Source/Victim Matrix 8-14

Figure 10-1 Rear View, Connector P3301 10-2
Figure 10-2 Rear View, Connector J3251 10-7
Figure 10-3 Rear View, Connector J3252 10-9
Figure 11-1 GTX General Faults/Failures 11-2
Figure 11-2 GTX 330 Failure Messages 11-3
~~Figure 11-3 GTX 33 Failure Messages ..... 11-4~~
~~Figure 11-4 GTX 3X5 Failure Messages ..... 11-5~~
~~Figure 11-5 GTX 3X5 Alerts, Warnings, and Faults ..... 11-7~~
~~Figure 11-6 GTX 3X5 G1000 Messages ..... 11-10~~
~~Figure A-1 Typical GTX 33/33D Dimensions and Center of Gravity ..... A-2~~
~~Figure A-2 GTX 33/33D Mounting Rack/Connector Assembly ..... A-3~~
Figure A-3 Typical GTX 330 Dimensions and Center of Gravity A-4
Figure A-4 GTX 330 Mounting Rack Assembly A-5
~~Figure A-5 Typical GTX 3X5 Panel Mount Dimensions and Center of Gravity ..... A-6~~
Figure A-6 GTX 3X5 Panel Mount Rack Assembly A-7
Figure A-7 Typical GTX 3X5 Horizontal Remote Mount Dimensions and Center of Gravity A-9
Figure A-8 GTX 3X5 Horizontal Remote Mount Rack Assembly A-10
Figure A-9 Typical GTX 3X5 Vertical Mount Dimensions and Center of Gravity A-12
Figure A-10 GTX 3X5 Vertical Mount Assembly A-13
Figure A-11 GTX 3X5 Connector and Vent Location A-15
Figure A-12 Optional Altitude Sensor A-16
Figure A-13 Typical GTX 3X5 G1000 Remote Mount Dimensions and Center of Gravity A-17
Figure A-14 GTX 3X5 G1000 Remote Mount Assembly A-18
Figure B-1 GTX 33/330 - Power and Ground B-4
Figure B-2 GTX 33/330 - GTN 6XX/7XX B-6
Figure B-3 GTX 330/330D - GPS 175/GNC 355 ..... B-8
Figure B-4 GTX 33/330 - GNS 400W/500W Series B-9
Figure B-5 GTX 33/330 - GNS 480 (CNX80) B-11
Figure B-6 GTX 33/330 - MFD Typical B-13
Figure B-7 GTX 33/330 - AHRS/Heading Data Source B-14
Figure B-8 GTX 33/330 - Altitude Data Source B-15
Figure B-9 GTX 33/330 - Audio Panel B-17
Figure B-10 GTX 33/330 - GDL 88 with GPS B-18
Figure B-11 GTX 33/330 - Radio Altimeter Source B-19
~~Figure B-12 GTX 3X5 - Power, Ground, and Configuration Module ..... B-20~~
~~Figure B-13 GTX 335 - GTN 6XX/7XX ..... B-22~~
~~Figure B-14 GTX 335 - Single GTN 6XX/7XX (Single/Dual GTX) ..... B-23~~
~~Figure B-15 GTX 3X5 - Single GTN 6XX/7XX / (Dual GTX) ..... B-24~~
~~Figure B-16 GTX 3X5 - Dual GTN / (Dual GTX) ..... B-25~~
~~Figure B-17 GTX 345 - GTN 6XX/7XX ..... B-26~~
~~Figure B-18 GTX 345 - Single/Dual GTN 6XX/7XX ..... B-28~~
~~Figure B-19 GTX 3X5 - GPS 175/GNC 355 ..... B-30~~
~~Figure B-20 GTX 3X5 - GNS 400W/500W Series ..... B-31~~
~~Figure B-21 GTX 345 and 335 - Single GNS 400W/500W Series ..... B-33~~
~~Figure B-22 GTX 345 and 335 - Dual GNS 400W/500W Series ..... B-34~~
~~Figure B-23 GTX 3X5 - GNS 480 (CNX80) ..... B-35~~
~~Figure B-24 GTX 3X5 - Providing GPS to GTX 3XX ..... B-36~~
~~Figure B-25 GTX 3X5 - Altitude Data Source ..... B-37~~
~~Figure B-26 GTX 3X5 - AHRS Heading Data Source ..... B-39~~
~~Figure B-27 GTX 3X5 - Gables 7534 Transponder Controller ..... B-40~~

~~Figure B-28 GTX 3X5 - Gables 7614 Transponder Controller (Collins) ..... B-42~~
~~Figure B-29 GTX 3X5 - Gables 7614 Transponder Controller (Honeywell Config 1) ..... B-44~~
~~Figure B-30 GTX 3X5 - Gables 7614 Transponder Controller (Honeywell Config 2) ..... B-46~~
~~Figure B-31 GTX 3X5 - Collins CTL-92E Transponder Controller (ARINC 429) ..... B-48~~
~~Figure B-32 GTX 3X5 - Collins CTL-92E Transponder Controller (RS-232) ..... B-50~~
~~Figure B-33 GTX 3X5 - Collins CTL-92 Transponder Controller (RS-232) ..... B-52~~
~~Figure B-34 GTX 3X5 - Traffic Annunciator Lamp ..... B-54~~
Figure B-35 ADS-B Out Failure Annunciator Lamp B-55
~~Figure B-36 GTX 3X5 - Audio ..... B-56~~
~~Figure B-37 GTX 3X5 - Switches ..... B-57~~
~~Figure B-38 GTX 335 - GTS 8XX Interface ..... B-58~~
~~Figure B-39 GTX 345 - Traffic System ..... B-59~~
~~Figure B-40 GTX 345 - Flight Stream ..... B-62~~
~~Figure B-41 GTX 3X5 - Radio Altimeter ..... B-63~~
~~Figure B-42 GTX 335 - GMX 200 ..... B-64~~
~~Figure B-43 GTX 345 - MX20/GMX 200 ..... B-65~~
~~Figure B-44 GTX 335 - TIS-A Display ..... B-66~~
~~Figure B-45 GTX 345 - GDU ..... B-67~~
~~Figure B-46 GTX 345D - Time Mark ..... B-68~~
~~Figure B-47 GTX 3X5 - GI 275 ..... B-69~~
~~Figure B-48 GTX 335 - G950/G1000 (Typical) ..... B-71~~
~~Figure B-49 GTX 345 - G950/G1000 (Typical) ..... B-72~~
~~Figure B-50 GTX 3X5 - G950/G1000 (Dual GTX) ..... B-74~~
~~Figure B-51 GTX 345 - G1000 with TAS 6XX ..... B-76~~
~~Figure B-52 GTX 345 - G1000 with External Traffic ..... B-78~~

LIST OF TABLES

Table 1-1 GTX 33/330 Unit List 1-5
~~Table 1-2 GTX 3X5/3X5R Unit List ..... 1-6~~
~~Table 1-3 GTX 3X5D/3X5DR Unit List ..... 1-6~~
Table 1-4 GTX Interfaces 1-8
Table 1-5 Transponder Control Reference Documents 1-14
Table 1-6 Electrical Load 1-24
Table 1-7 Garmin Documents 1-25
Table 1-8 Federal Aviation Administration Documents 1-26
Table 1-9 Industry Standards 1-26
Table 3-1 GTX without Specific G950/G1000 Pre-Installation Checklist 3-4
Table 3-2 GTX 3X5 with Specific G950/G1000 Pre-Installation Checklist 3-5
Table 3-3 Bluetooth Reception Verification Check 3-7
Table 3-4 Approved Control and Display Sources 3-11
Table 3-5 Altitude Source Options 3-12
Table 3-6 Multiple Pressure Altitude Source Priority 3-13
Table 3-7 Pressure Altitude Source Selection #1 3-13
Table 3-8 Pressure Altitude Source Priority Order #1 3-13
Table 3-9 Heading Source Options 3-14
Table 3-10 Multiple Heading Source Priority 3-14
Table 3-11 Radar Altimeter Priority List 3-16
Table 3-12 Version 2 Compliance with Installation of Multiple ADS-B Out Equipment 3-18
Table 3-13 Maximum dB Loss Allowed From Transponder to Antenna 3-20
Table 3-14 Coaxial Cable Specifications 3-21
Table 3-15 Typical Cable Connector Loss 3-21
Table 3-16 GTX 3X5 GPS Antennas 3-22
Table 3-17 GPS dB Loss Allowance 3-25
Table 3-18 Ground Plane Definitions and Ground Path Resistance Requirements 3-29
Table 3-19 Airframe Bonding Hardware 3-31
Table 4-1 GTX 33/330 and GTX 3X5 Connector Kit Options 4-2
Table 4-2 GTX 33/330 and GTX 3X5 Backplate Assembly Options 4-2
Table 4-3 GTX 33/330 and GTX 3X5 Mount Rack Options 4-2
Table 4-4 GTX 3X5 Configuration Module 4-2
Table 4-5 Permitted Installation Ethernet Cable P/Ns 4-3
Table 4-6 Recommended Crimping Tools 4-4
Table 5-1 Instrument Grounding Parts 5-8
Table 5-2 Hardware for Tube-and-Fabric Shelf Installation 5-10
Table 5-3 Remote Rack Fasteners 5-11
Table 5-4 Shield Wire Assembly 5-23
Table 5-5 GTX 330/330D Backshell/Connector Assembly 5-25
Table 5-6 GTX 33/33D Backshell/Connector Assembly 5-28
Table 5-7 GTX 3X5 Connector Kit Hardware 5-30
Table 5-8 Standard and G1000 Mount Backplate Hardware 5-31
Table 5-9 Vertical Mount Backplate Hardware 5-32
Table 5-10 Standard and G1000 Mount Backplate Hardware 5-33
Table 5-11 Vertical Mount Backplate Hardware 5-34
Table 5-12 Configuration Module Kit (P/N 011-00979-03) 5-35
Table 5-13 Altitude Encoder Kit (P/N 011-03080-00) 5-36
Table 7-1 Panel Mount Audio Settings 7-4

Table 7-2 Panel Mount Altitude and Timer Expired Alert Settings 7-5
Table 7-3 Panel Mount Traffic Alert Settings 7-5
Table 7-4 RS-232 Channel Selections 7-6
Table 7-5 RS-422 Output Selections 7-7
Table 7-6 ARINC 429 Inputs 7-8
Table 7-7 ARINC 429 Outputs 7-9
Table 7-8 HSDB Formats 7-9
Table 7-9 Discrete Input Configuration 7-10
Table 7-10 Discrete Output Configuration 7-11
Table 7-11 Panel Mount Unit Settings 7-12
Table 7-12 Panel Mount Display Settings 7-13
Table 7-13 Primary and Secondary Panel Mount Altitude Source Settings 7-14
Table 7-14 Primary and Secondary Panel Mount GPS Source 7-15
Table 7-15 Panel Mount Alt Encoder Settings 7-16
Table 7-16 Internal AHRS Settings 7-18
Table 7-17 Panel Mount GTX 3X5 ADS-B Settings 7-20
Table 7-18 Cable Loss and Delay 7-22
Table 7-19 GTX 3X5 Panel Mount Aircraft Settings 7-23
Table 7-20 Active Traffic Systems 7-38
Table 7-21 Jump To Selections 7-54
Table 7-22 Message Selection Descriptions 7-55
Table 7-23 Display Mode Selections 7-56
Table 7-24 BKLT (Backlight) Selections 7-56
Table 7-25 BKLT SRCE (Backlight Source) Selections 7-57
Table 7-26 Key Lighting Selections 7-57
Table 7-27 Key Lighting Source Selections 7-58
Table 7-28 Contrast Mode 7-59
Table 7-29 VFR Key Selections 7-59
Table 7-30 ARINC 429 Inputs 7-60
Table 7-31 ARINC 429 Output Selections 7-61
Table 7-32 ARINC 429 Transmit Data Labels 7-61
Table 7-33 Transmit Data Sequence 7-62
Table 7-34 RS-232 Input/Output Selections 7-63
Table 7-35 Altitude Format Selections 7-64
Table 7-36 Squat Switch Configuration 7-65
Table 7-37 Auto Flight Timer Selection Description 7-65
Table 7-38 Mode S Address, Aircraft Registration Page Selections 7-67
Table 7-39 Mode S Flight ID Page Selections 7-68
Table 7-40 GPS Configuration Page Selections 7-69
Table 7-41 Aircraft Type Selections 7-69
Table 8-1 Ramp Test Pressure Altitude Check Scenario 8-9
Table 9-1 Weight of GTX Configurations 9-6
Table 9-2 Example Weight and Balance Calculation 9-7
Table 10-1 GTX 33/330 J3301 Pin Assignments 10-2
Table 10-2 Lighting/Power Pin Assignments 10-4
Table 10-3 Temperature Probe Pin Assignments 10-5
Table 10-4 GTX 33/330 Encoded Altitude Inputs 10-5
Table 10-5 GTX 33/330 Discrete Outputs 10-5
Table 10-6 GTX 33/330 Discrete Inputs 10-6
Table 10-7 GTX 3X5 J3251 Pin Assignments 10-7

Table 10-8 GTX 345 J3252 Pin Assignments 10-9
Table 10-9 Lighting/Power Pin Assignments 10-10
Table 10-10 GTX 3X5 Power Configuration and GTX 3X5 Power Control Inputs 10-10
Table 10-11 GTX 3X5 Power Configuration and Power Control Functions 10-11
Table 10-12 GTX 3X5 Encoded Altitude Inputs 10-11
Table 10-13 GTX 3X5 Discrete Outputs 10-12
Table 10-14 GTX 3X5 Configurable Discrete Output Pins 10-12
Table 10-15 GTX 3X5 Discrete Inputs 10-13
Table 10-16 GTX 3X5 Configurable Discrete Input Pins 10-13
Table A-1 Part Numbers (Panel Mount) A-8
Table A-2 Part Numbers (Remote Horizontal Mount) A-11
Table A-3 Part Numbers (Remote Vertical Mount) A-14
Table A-4 Part Numbers (Remote G1000 Mount) A-19
Table C-1 Compatible LRUs C-2
Table C-2 Remote Control C-3
Table C-3 GPS Source C-5
Table C-4 Altitude Sources C-7
Table C-5 Radar Altimeters C-10
Table C-6 Heading Sources C-11
Table C-7 Audio Panels C-13
Table C-8 Traffic and Weather Displays - GTX 345 ..... C-14
Table C-9 TIS-A Traffic Display - GTX 33/330 and GTX 335 ..... C-16
Table C-10 Traffic Sensors C-17
Table C-11 Bluetooth C-18
Table C-12 UAT Out Control C-18

1 GENERAL DESCRIPTION

1.1 Introduction 1-2
1.2 Terminology 1-3
1.3 Scope 1-5
1.3.1 Approved Aircraft, Systems, and Equipment 1-5
1.3.2 Approved Aircraft with Systems Not Covered by the STC 1-6
1.3.3 Part 23 Aircraft Not Identified on the AML 1-7
1.3.4 Other Aircraft Not Identified 1-7
1.3.5 Antennas 1-7
1.4 System Overview 1-8
1.4.1 GTX Interface Summary 1-8
1.4.2 GTX 330/330D 1-9
1.4.3 GTX 33/33D 1-13
1.4.4 GTX 3X5 Non-G1000 Interface 1-15
1.4.5 GTX 335/335D/335R/335DR 1-17
1.4.6 GTX 345/345D/345R/345DR 1-19
1.4.7 GTX 335R/335DR/345R/345DR with Specific G950/G1000 1-21
1.4.8 GAE with GTX 3X5 Only 1-23
1.5 Technical Specifications 1-24
1.5.1 Power Requirements 1-24
1.5.2 Environmental Qualification Form 1-24
1.6 Reference Documentation 1-25
1.7 STC Permission 1-27

1.1 Introduction

This manual provides instructions and defines conditions and limitations for installation approval of the GTX 33/33D/330/330D (GTX 33/330) and GTX 335/335D/335R/335DR/345/345D/345R/345DR (GTX 3X5) series transponders, as well as physical, mechanical, and electrical requirements.

This STC approves a Version 2 (RTCA DO-260B) ADS-B Out compliant solution, meeting equipment requirements defined in 14 CFR 91.227, using GTX 3X5 or GTX 33/330 series transponders for the Part 23 aircraft listed on the STC Approved Model List (AML).

Refer to *GTX 33X and GTX 3X5 ADS-B AML STC Equipment List* (P/N 005-00734-05) for required hardware and software levels.

After installation of the GTX 330, FAA Form 337
must be completed by an appropriately certificated agency to return the aircraft to service.

1.2 Terminology

Unless otherwise specified, references made to:

- "GTX" are applicable to all GTX 33/330 and GTX 3X5 systems.
- "GTX 33X" or "GTX 33/330" are applicable to the GTX 330/330D/33/33D
- "GTX 3X5" is applicable to the GTX 335/335D/335R/335DR/345/345D/345R/345DR
- "GTX 3X5D" is applicable to the GTX 335D/335DR/345D/345DR
- "ADS-B" refers to ADS-B Out and ADS-B In
- "ADS-B Out" refers to Version 2 ADS-B Out only

ADS-B Out is the transmission of ownship position, altitude, velocity, and additional information to other aircraft and ATC ground-based surveillance systems.

ADS-B In refers to TIS-B traffic and FIS-B weather received from ground stations over UAT and ADS-B and ADS-R traffic targets received directly over 1090 MHz or 978 MHz (UAT).

References to metallic aircraft in this manual are those with an aluminum skin. Nonmetallic aircraft refers to all other aircraft (e.g., wooden aircraft, aircraft with composite skin, or aircraft with tube-and-fabric construction).

The term *squitter* refers to a burst or broadcast of aircraft-tracking data that is transmitted periodically by a Mode S transponder without interrogation from a controller's radar.

Abbreviations used in this manual are:

AC	Advisory Circular
ADC	Air Data Computer
ADLP	Airborne Data Link Processor
ADS-B	Automatic Dependent Surveillance - Broadcast
ADS-R	Automatic Dependent Surveillance - Rebroadcast
AFM	Airplane Flight Manual
AFMS	Airplane Flight Manual Supplement
AHRS	Attitude Heading Reference System
AML	Approved Model List
ATC	Air Traffic Control
ATCRBS	Air Traffic Control Radar Beacon System
CFR	Code of Federal Regulations
CSA	Conflict Situational Awareness
EFIS	Electronic Flight Instrument System
EGNOS	European Geostationary Navigation Overlay Service
EGPWS	Enhanced Ground-Proximity Warning System
EHS	Enhanced Surveillance
ELA	Electrical Load Analysis
ELT	Emergency Locator Transmitter
EMC	Electromagnetic Compatibility
EMI	Electromagnetic Interference
ES	Extended Squitter

EQF	Environmental Qualification Form
FAA	Federal Aviation Administration
FCC	Federal Communications Commission
FIS-B	Flight Information Services - Broadcast
GAE	Garmin Altitude Encoder
GDU	Garmin Display Unit
GNS	Garmin Navigation System
GNSS	Global Navigation Satellite System
GPS	Global Positioning System
GTN	Garmin Touch Navigator
GTX	Garmin Transponder
HAT	Height Above Terrain
HIRF	High Intensity Radio Field
HSDB	High-Speed Data Bus
IEL	Indirect Effects of Lightning
IM	Installation Manual
I/O	Input/Output
LRU	Line Replaceable Unit
MM	Maintenance Manual
OAT	Outside Air Temperature
OEM	Original Equipment Manufacturer
PED	Portable Electronic Device
POH	Pilot's Operating Handbook
RF	Radio Frequency
RTCA	Radio Technical Commission for Aeronautics
SBAS	Satellite Based Augmentation Systems
SPI	Special Position Identification
SRM	Structural Repair Manual
STC	Supplemental Type Certificate
TAS	Traffic Advisory System
TC	Type Certificate
TCAS	Traffic Alert and Collision Avoidance System
TIS	Traffic Information Service
TSO	Technical Standard Order
UAT	Universal Access Transceiver
USB	Universal Serial Bus
VFR	Visual Flight Rules
WAAS	Wide Area Augmentation System
XPDR	Transponder

1.3 Scope

This installation manual defines modifications needed for installing the GTX 33/330 and GTX 3X5 systems with ADS-B Out and ADS-B In functionality under AML STC SA01714WI.

The data in this manual supports:

- Upgrade of a GTX 33/330 transponder for ADS-B Out compliance
- Replacement of a GTX 33/330 with a GTX 3X5
- Replacement of a non-ADS-B transponder with an ADS-B compliant GTX 33/330 or GTX 3X5 transponder
- Upgrade specific v15.xx and earlier G950/G1000 flight deck systems for ADS-B In capabilities and ADS-B Out compliance with a GTX 335R or GTX 345R unit

For approved G950/G1000 installations, refer to the *STC Equipment List* and Table II of the AML.

Interfaces not required for ADS-B functionality, such as optional discrete inputs, do not require STC approval. These installation aspects are included as reference only.

The installer must determine aircraft eligibility before modifying any Type Certified aircraft to ensure the requirements of this STC are met.

1.3.1 Approved Aircraft, Systems, and Equipment

Modifications defined in this manual allow the installation or replacement of equipment listed in Table 1-1 and Table 1-2, and are approved under SA01714WI Part 23 AML STC. The approval also includes the interface to equipment listed in Appendix C.

Table 1-1 GTX 33/330 Unit List

Unit	Description	P/N
GTX 330 w/ES	Black front, panel-mounted, non-diversity with extended squitter	011-00455-60
GTX 330 w/ES	Gray front, panel-mounted, non-diversity with extended squitter	011-00455-80
GTX 330D w/ES	Black front, panel-mounted, diversity with extended squitter	011-00455-70
GTX 330D w/ES	Gray front, panel-mounted, diversity with extended squitter	011-00455-90
GTX 33 w/ES	Remote-mounted, non-diversity with extended squitter	011-00779-20
GTX 33 w/ES	Remote-mounted, non-diversity with extended squitter	011-00779-30
GTX 33D w/ES	Remote-mounted, diversity with extended squitter	011-00779-21

Table 1-2 GTX 3X5/3X5R Unit List

Unit	Description	P/N
GTX 335	Black front, panel-mounted, extended squitter w/o internal GPS	011-03300-00
GTX 335 NV	Black front, panel-mounted, extended squitter w/o internal GPS, night vision compatible	011-03300-20
GTX 335 GPS	Black front, panel-mounted, extended squitter with internal GPS	011-03300-40 011-03300-41
GTX 335R	Remote-mounted, extended squitter w/o internal GPS	011-03301-00 011-03301-01
GTX 335R GPS	Remote-mounted, extended squitter with internal GPS	011-03301-40
GTX 345	Black front, panel-mounted, extended squitter w/o internal GPS	011-03302-00 011-03302-01 011-03302-02
GTX 345 GPS	Black front, panel-mounted, extended squitter with internal GPS	011-03302-40 011-03302-41
GTX 345R	Remote-mounted, extended squitter w/o internal GPS	011-03303-00 011-03303-01 011-03303-02
GTX 345R GPS	Remote-mounted, extended squitter with internal GPS	011-03303-40 011-03303-41
GTX 345 NV	Panel-mounted, w/o internal GPS	011-03302-20 011-03302-21
GTX 345 NV GPS	Panel-mounted, with internal GPS	011-03302-60 011-03302-61

Table 1-3 GTX 3X5D/3X5DR Unit List

Unit	Description	P/N
GTX 335D	Black front, panel-mounted, diversity with extended squitter w/o internal GPS	011-04331-00
GTX 335DR	Remote-mounted, diversity with extended squitter w/o internal GPS	011-04332-00
GTX 345D	Black front, panel-mounted, diversity with extended squitter w/o internal GPS	011-04333-00
GTX 345DR	Remote-mounted, diversity with extended squitter w/o internal GPS	011-04334-00

1.3.2 Approved Aircraft with Systems Not Covered by the STC

Aircraft that are identified on the Approved Model List (AML) meet the minimum required configuration for applicability of this STC. Some of these aircraft may have been modified over the years or have been equipped with systems with which the GTX 3X5 is not approved to interface. The installer must make the final determination if this STC is applicable to a given aircraft before any modifications are performed.

The GTX NV (Night Vision) unit(s) may only be installed in aircraft that are compatible with Night Vision Imaging Systems (i.e., approved to use NVGs). The display aspects of the GTX NV unit(s) will affect the prior approval of the NVIS installation. NVIS evaluation and certification is outside the scope of this STC and must be coordinated separately.

1.3.3 Part 23 Aircraft Not Identified on the AML

Aircraft models that are not included in the STC AML may be considered for installation of the GTX 33/ 330 or GTX 3X5. Installers are encouraged to submit the installation data to Garmin Technical Support, which upon further review may be included in future revisions of this STC. For those aircraft, data included in this manual may be used for the installation, but requires separate airworthiness approval.

1.3.4 Other Aircraft Not Identified

Transport Category Aircraft (Part 25) and Rotorcraft (Part 27/29) are not part of this STC. These aircraft may be possible selections for installation of this system. Installers should contact Garmin about possible information that can help an installation of this type. Data in this manual may be used for the installations, but additional FAA approval is required.

1.3.5 Antennas

This STC does not provide installation guidance for related antennas. Refer to Section 3 for general guidance.

1.4 System Overview

ADS-B technology improves situational awareness and flight safety. A Garmin transponder with ADS-B Out automatically transmits position, velocity, and heading information to other aircraft and ground stations. ADS-B Out gives automatic transmission of aircraft information without a request.

Garmin transponders approved by this STC are the GTX 33/330 and GTX 3X5 transponders. The GTX 33/330 and GTX 3X5 transponders have a radio transmitter/receiver that operates on L-Band radio frequencies. These transponders receive ground radar or TCAS interrogations and transmit a coded response of pulses to ground based radar on a frequency of 1090 MHz. Each unit has IDENT capability and replies to ATCRBS Mode A, Mode C, and Mode S All-Call interrogations.

1.4.1 GTX Interface Summary

GTX units use ARINC 429, RS-232, and discrete inputs and outputs to transmit and receive data with other LRUs and systems on the aircraft. The GTX 345 adds Garmin High Speed Data Bus (HSDB) interfaces. For interconnect information, refer to Appendix B.

Table 1-4 GTX Interfaces

Interface Description	Input/Output	Qty GTX 33/33D/ 330/330D	Qty GTX 335/335D/ 335R/335DR	Qty GTX 345/345D/ 345R/345DR
RS-232	IN/OUT	2	3	4
ARINC 429	IN	4	2	2
	OUT	2	1	1
Gillham Gray code altitude input	IN	1	1	1
OAT probe [5]	IN	1	1	1
Analog audio output	OUT	1	1	1
Discrete	IN	6	6 [4]	6 [4]
	OUT	2	1	1
	IN/OUT [1]	-	2	4
Suppression bus	IN/OUT	1	1	1
Configuration/pressure sensor module interface	IN/OUT [2]	-	1	1
USB data port	IN/OUT	-	1	1
Lighting bus	IN [3]	1	1	1
Switched power output	OUT	1	1	1
Time mark	IN/OUT [6]	-	1	1
HSDB	IN/OUT	-	-	2
RS-422	OUT	-	-	1

Notes:

[1] Configurable to be an input or output on a per-discrete basis.
[2] Can interface to a configuration module or a combination configuration/pressure sensor module.
[3] Panel-mounted units only.
[4] If the Gillham Gray code is not used, these pins can be used as additional discrete inputs.
[5] This is not covered under this STC.

[6] Time Mark is an Output when the GTX has an internal GPS and an Input for GTX 345D/ 345DR units.

1.4.2 GTX 330/330D

The GTX 330/330D are standalone, panel mount units that operate through an integrated display or can be controlled by a GTN 6XX/7XX or GNS 480 external control unit.

- TIS-A information is provided to a GNS 480 (CNX80) or GTN 6XX/7XX through a RS-232 digital interface
- TIS-A information is provided to a GNS 400/500W series, GMX 200, GDU 700/1060, or GDU 620 using an ARINC 429 interface

The display indicates when ADS-B information transmits and displays an ADS-B Out failure when degraded.

Unit Features

- Mode S transponder
- ADS-B Out capability
- Entry of squawk code
- Shows squawk code
- In-flight ID entry (software v8.02 or later)
- Shows pressure altitude
- Shows density altitude
- Shows outside air temp
- Shows flight timers
- Audio output
- TIS-A traffic output to a compatible display
- Altitude deviation alerts

Unit Interfaces

- ARINC 429
- RS-232
- Gray code
- Discrete I/O
- Power is supplied by the aircraft's avionics bus. For information about inputs, refer to Section 10
- GTX 330 units interface with a transponder antenna attached to the bottom of the fuselage
- GTX 330D units interface with two transponder antennas. One is attached to the top of fuselage, the other to the bottom

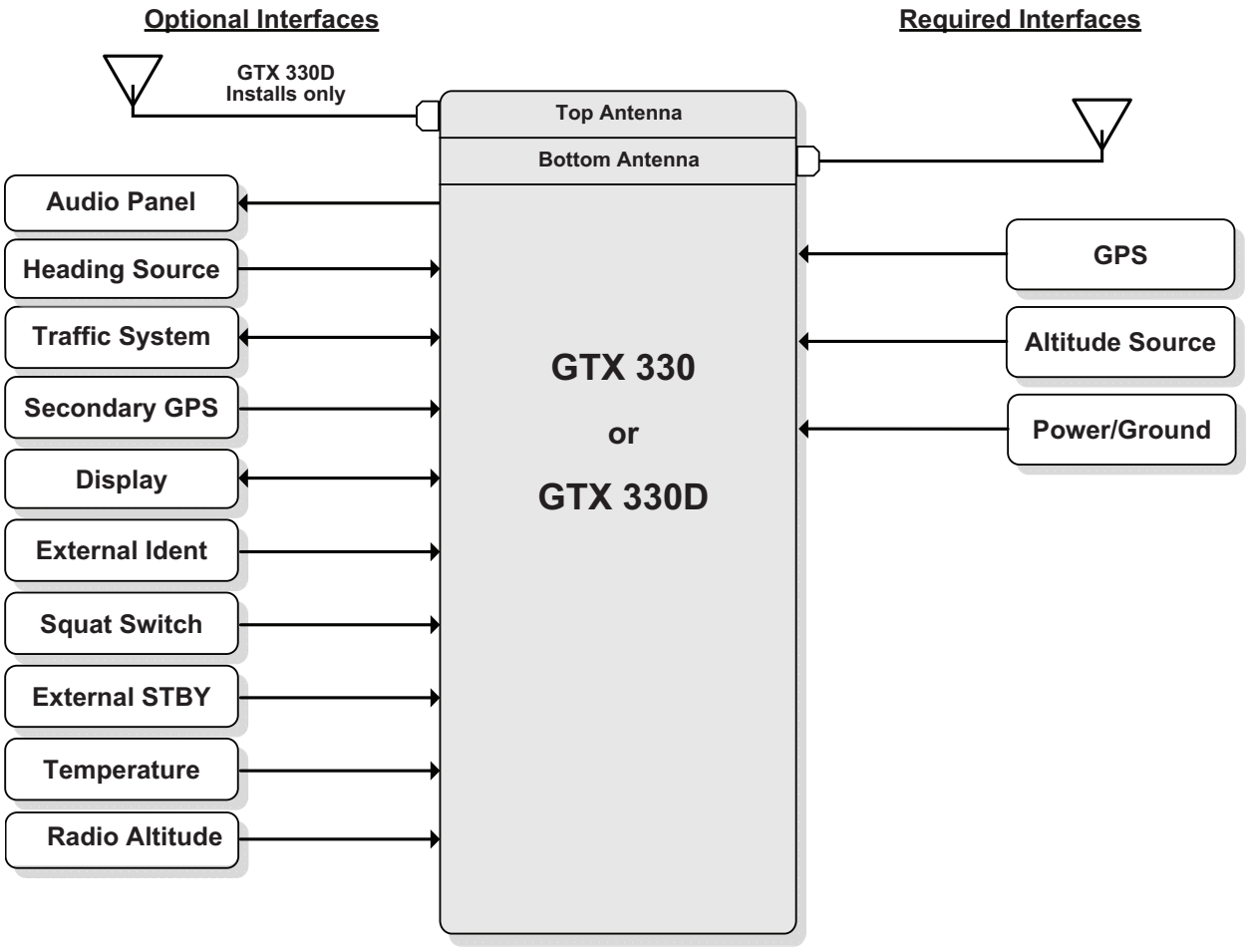

Figure 1-1 GTX 330 or GTX 330D Interface Summary

Refer to *GTX 330 Pilot's Guide* or *GTX 33X and GTX 3X5 ADS-B Maintenance Manual* for more information about the controls and their functions.

Figure 1-2 GTX 330/330D Front Panel

NOTE

If the transponder is in the ON or ALT operating mode, the transponder becomes an active part of the Air Traffic Control Radar Beacon System (ATCRBS). The transponder will reply to interrogations from aircraft with TCAS installed.

Key Selection Functions:

OFF Powers off the GTX 330.

STBY Sets the unit to Standby mode. When in Standby mode, the transponder does not reply to interrogations. For GTX software v8.02 or later, ON GND is automatically set with a squat switch or a signal from an approved control/display unit, such as a GTN 6XX/7XX, GNS 400W/500W series, or GNS 480.

ON Powers the unit with Mode A and Mode S on. The transponder replies to Mode A and Mode S interrogations, as indicated by the reply symbol ®. The replies do not include altitude information.

ALT Powers up the unit with Mode A, Mode C, and Mode S on. The transponder replies to identification, altitude, and Mode S interrogations as indicated by the reply symbol ®. Replies to altitude interrogations include the standard pressure altitude received from an external altitude source, which is not adjusted for barometric pressure. The ALT mode can be set in aircraft not installed with an altitude encoder. The reply signal does not include altitude information.

IDENT Activates the Special Position Identification (SPI) pulse for 18 seconds to assist ATC in identifying the aircraft. “IDENT” displays in the upper-left corner of the display while the SPI pulse is acitve.

VFR Sets transponder code to the pre-programmed VFR code (set to 1200 at the factory). Push the **VFR** key again to restore the previous identification.

FUNC Changes page shown on the right-side of display. Data shown includes pressure altitude, flight time, altitude monitor, count up, and count down timers. In Configuration mode, moves through the function pages.

START/STOP Starts and stops the altitude monitor, count up, count down, and flight timers.

CRSR Starts entry of the start time for the count down timer and cancels transponder code entry. Selects changeable fields in Configuration mode. For software v8.02 or later, hold the **CRSR** key when unit is powered on for Ground Test mode. This will put the aircraft into an airborne mode for test purposes.

CLR Resets the count up, count down, and flight timers. Cancels the key pushed during code selection and count down entry.

8 Decrease contrast and display brightness when the respective fields are shown and puts the number 8 into the count down timer.

9 Increases contrast and display brightness when the related fields are shown and puts the number 9 into the count down timer.

Display Functions:

PRESSURE ALT Displays altitude data supplied to GTX 330 in feet, hundreds of feet (i.e., flight level), or meters, as configured at installation.

FLIGHT TIME Displays flight time controlled by **START/STOP** key or by one of four sources of air/ground determination (squat switch, GPS ground speed recognition, air data airspeed recognition, or altitude increase), as configured during installation. If air/ground determination is used, the timer starts when the GTX 330 determines the aircraft is airborne and stops when determined to be on the ground.

ALT MONITOR Triggers an aural/visual alert when the aircraft goes above the altitude limit. Controlled by **START/STOP** key.

OAT/DALT Displays outside air temperature and density altitude when a temperature input has been configured.

COUNT UP Timer controlled by **START/STOP** and **CLR** keys.

COUNT DOWN Timer controlled by **START/STOP**, **CLR**, and **CRSR** keys. The initial count down time is entered with the **0 - 9** keys.

CONTRAST Displayed only when Manual Contrast mode is selected in Configuration mode. Contrast is controlled by the **8** and **9** keys.

DISPLAY Displayed only when Manual Backlighting mode is selected in Configuration mode. Backlighting is controlled by the **8** and **9** keys.

ADS-B TX Starts/stops extended squitter function. Controlled by **START/STOP** key.

FLIGHT ID If GTX 330 uses software v8.02 or later, and the system is configured to allow the pilot to change flight ID, then the flight ID can be set with the **CRSR** key. If not, the flight ID is set in Configuration mode and cannot be changed during normal operation.

1.4.3 GTX 33/33D

GTX 33/33D units are remote-mounted and require a display/control interface as supplied by the GTN 6XX/7XX or GNS 480 to be installed in accordance with this STC. Basic transponder functions of the GTX 33/33D are identical to the GTX 330/330D. The GTX 33/33D installation requires the use of the approved control source. Many optional functions are not required or detailed in this installation manual because the GTX 33/33D is controlled through the GTN 6XX/7XX or GNS 480.

GTX 33/33D units provide:

- Mode S transponder
- ADS-B Out capability
- TIS-A traffic output to a compatible display
- Optional functions supported by the control/display source

The transponder supplies a message to the control sources when the unit has an ADS-B Out failure. This alerts the crew that the unit has a degraded ADS-B system.

GTX 33/33D units communicate through:

- ARINC 429
- RS-232
- Gray code
- Discrete I/O

Power is supplied by the aircraft's avionics bus. Non-diversity GTX 33 units interface with a transponder antenna attached to the bottom of the fuselage. GTX 33D units interface to a transponder antenna attached to the top of the fuselage and an antenna attached to the bottom. For input details, see Section 8.

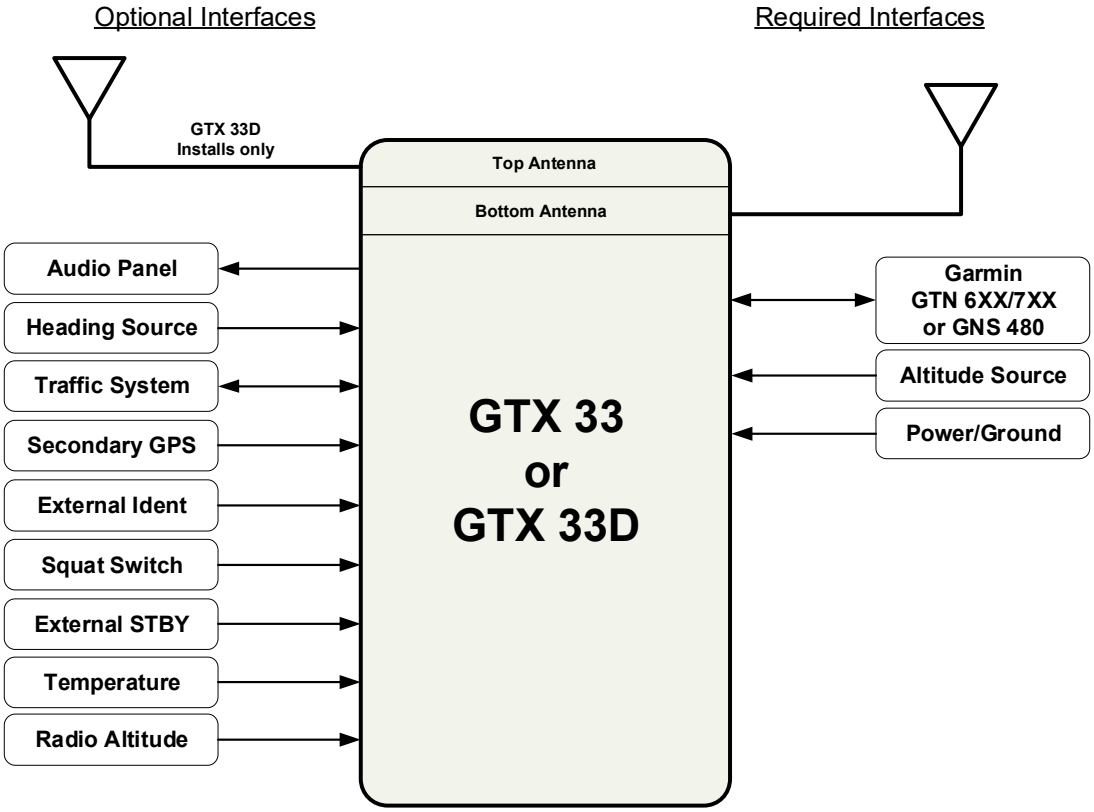

Figure 1-3 GTX 33 or GTX 33D Interface Summary

Table 1-5 Transponder Control Reference Documents

Document	Garmin P/N
GTN 625/635/650 Cockpit Reference Guide (CRG)	190-01004-04
GTN 625/635/650 Pilot's Guide	190-01004-03
GTN 725/750 Cockpit Reference Guide (CRG)	190-01007-04
GTN 725/750 Pilot's Guide	190-01007-03
GNS 480 (CNX80) Color GPS/NAV/COM Installation Manual	560-0982-01
GNS 480 Color GPS/WAAS/NAV/COM Pilot's Guide	560-0984-01
GTX 3X5 Pilot's Guide	190-01499-00

Figure 1-4 GTN 6XX Transponder Control

Figure 1-5 GTN 7XX Transponder Control

Figure 1-6 GNS 480 Transponder Control

~~1.4.4 GTX 3X5 Non-G1000 Interface~~

The GTX 3X5 has remote and panel-mounted units. The remote-mounted units have an equivalent interface to the GTN 6XX/7XX or GNS 480 as the GTX 33/33D units, as shown in Figure 1-4, Figure 1-5, and Figure 1-6. For more information about the controls and their functions, refer to *GTX 3X5 Pilot's Guide* or *GTX 33X and GTX 3X5 ADS-B Maintenance Manual*.

Figure 1-7 GTX 335/345 Front Panel

NOTE

If the transponder is in the ON or ALT operating mode, the transponder becomes an active part of the Air Traffic Control Radar Beacon System (ATCRBS). The transponder will reply to interrogations from aircraft with TCAS installed.

Key Selection Functions for GTX 335/335D/345/345D:

OFF Powers off GTX 335/335D/345/345D.

SBY Selects Standby mode. When in Standby mode, the transponder does not reply to any interrogations. New codes can be put in and a "SBY" indication will display.

ON Selects ON mode, allowing Mode A and Mode S replies. Mode C altitude reporting is prevented. ADS-B Out will not return barometric altitude as it switches to GPS altitude while in this mode. Interrogations are shown by the reply symbol ®.

ALT Altitude mode is automatically selected when the aircraft becomes airborne through the use of the unit's air/ground logic or when the **ALT** key is pushed. While the aircraft is on the ground and in ALT mode, the transponder does not give Mode A and Mode C replies. It provides acquisition squitter and replies to discretely addressed Mode S interrogations.

While aircraft is in ALT mode and airborne, it provides Mode A, Mode C, and Mode S replies and transmissions of acquisition and extended squitter to include ADS-B Out.

IDENT Push the **IDENT** key to start the Special Position Identification (SPI) pulse for 18 seconds to show the transponder return from others on an air traffic controller's screen. During the IDENT period, the word "IDENT" is displayed.

VFR Sets transponder code to the pre-programmed VFR code selected in Configuration mode (set to 1200 at the factory). Push the **VFR** key again to restore the identification code used before.

FUNC In Normal mode, push **FUNC** key to change the subpage group shown on the right-side of the display. In Configuration mode, moves through the function pages.

ENT Accepts entry for selected item and moves the cursor to the next changeable item or function selection in Configuration and Normal operation. Starts and stops the altitude monitor, count up, count down, and flight timers.

CRSR Selects changeable fields in Configuration and Normal operation. Starts entry of the start time for the count down timer and cancels transponder code entry. Hold the **CRSR** key to put the unit into a Ground Test mode, which forces the aircraft into an airborne status for tests.

CLR Resets count up, count down, and flight timers. Cancels the previous key pushed during code selection, count down entry, or flight ID entry. Used in Configuration mode to scroll through the function pages.

8 Used as a scroll-up key to move through page groups in Normal and Configuration mode.

9 Used as a scroll-down key to move through page groups in Normal and Configuration mode.

Display Functions:

FLIGHT ID If system is configured to Allow Pilot to Edit Flt ID in Configuration mode to *Yes*, the flight ID can be changed by the pilot at any time in Normal mode. This allows the pilot/crew to set specific flight ID for transmission to ATC interrogations.

UP COUNTER Timer controlled by **ENT** and **CLR** keys.

DOWN COUNTER Timer controlled by **ENT**, **CLR**, and **CRSR** keys. The initial count down time is put in with the **0 - 9** keys.

FLIGHT TIMER Shows flight time, which is controlled by the **ENT** key or by one of four airborne sources (e.g., squat switch, GPS ground speed recognition, air data airspeed recognition, or altitude increase), as configured during installation. The timer starts when the GTX 3X5 finds that the aircraft is airborne.

TRIP TIMER Timer controlled by **ENT** and **CLR** keys.

PRESSURE ALT Shows altitude data supplied to the GTX 3X5 in feet, hundreds of feet (i.e., flight level), or meters, as selected at configuration.

ALT MONITOR Controlled by **ENT** key. Operates a voice alarm and warning annunciator when above altitude limit.

SAT/DALT Displays when GTX 3X5 is configured with temperature input. Shows static air temperature and density altitude.

CONTRAST/OFFSET Contrast is controlled by **8** and **9** keys.

BACKLIGHT/OFFSET Page displays when Photocell Backlighting mode is selected in Configuration mode. Backlighting is controlled by **8** and **9** keys.

MESSAGES	Alerts user of transponder faults, fails, and advisory messages. “MSG” displays when a message is generated. **CRSR** and **ENT** keys access messages to view and acknowledgment.
BLUETOOTH	~~Page displays only on the GTX 345/345D when configured for Bluetooth at installation. When selected, allows PED to pair to the GTX 345 and device management to show ADS-B In data.~~
1090ES TX CTRL	Displays only when unit is configured for 1090ES Out Control in Configuration mode to be *Pilot Set*. When configured, this can be highlighted by **CRSR** key, changed by **8** and **9** keys, and selected by **ENT** key. Sets the extended squitter function *On* or *Off*.

~~1.4.5 GTX 335/335D/335R/335DR~~

~~GTX 335/335D/335R/335DR units are panel or remote-mounted units that have Mode S with ADS-B Out extended squitter capability. The panel-mounted units contain an integrated display, while the remote-mounted units require an interface to a control source for normal operation and functionality. It is recommended to wire uninterrupted aircraft battery power to the GPS Keep Alive input of GTX 3X5/ 3X5R units with SBAS/GPS receivers. This preserves internal SBAS/GPS data between unit power cycles and minimizes the time required to obtain an initial position fix.~~

~~*GTX 335/335D/335R/335DR features:*~~

- ~~Mode S transponder~~
- ~~ADS-B Out capability~~
- ~~Optional internal GNSS receiver~~
- ~~Optional GAE pressure sensor module~~
- ~~Entry of squawk code and flight ID~~
- ~~Show squawk code and flight ID~~
- ~~Show pressure altitude~~
- ~~Show outside air temp~~
- ~~Show density altitude~~
- ~~Show flight timers~~
- ~~Audio output~~
- ~~TIS-A traffic output to a compatible display~~

~~The transponder provides an ADS-B Out failure message to alert that the unit has a degraded ADS-B system. GTX 335/335R units interface to a transponder antenna mounted to the bottom of the fuselage. GTX 335D/335DR units interface to a transponder antenna mounted to the top of the fuselage as well as an antenna mounted to the bottom.~~

~~*GTX 335/335D/335R/335DR interfaces:*~~

- ~~ARINC 429~~
- ~~RS-232~~
- ~~Gray code~~
- ~~Discrete I/O~~

~~Figure 1-8 shows the interfaces for the GTX 335/335D/335R/335DR.~~

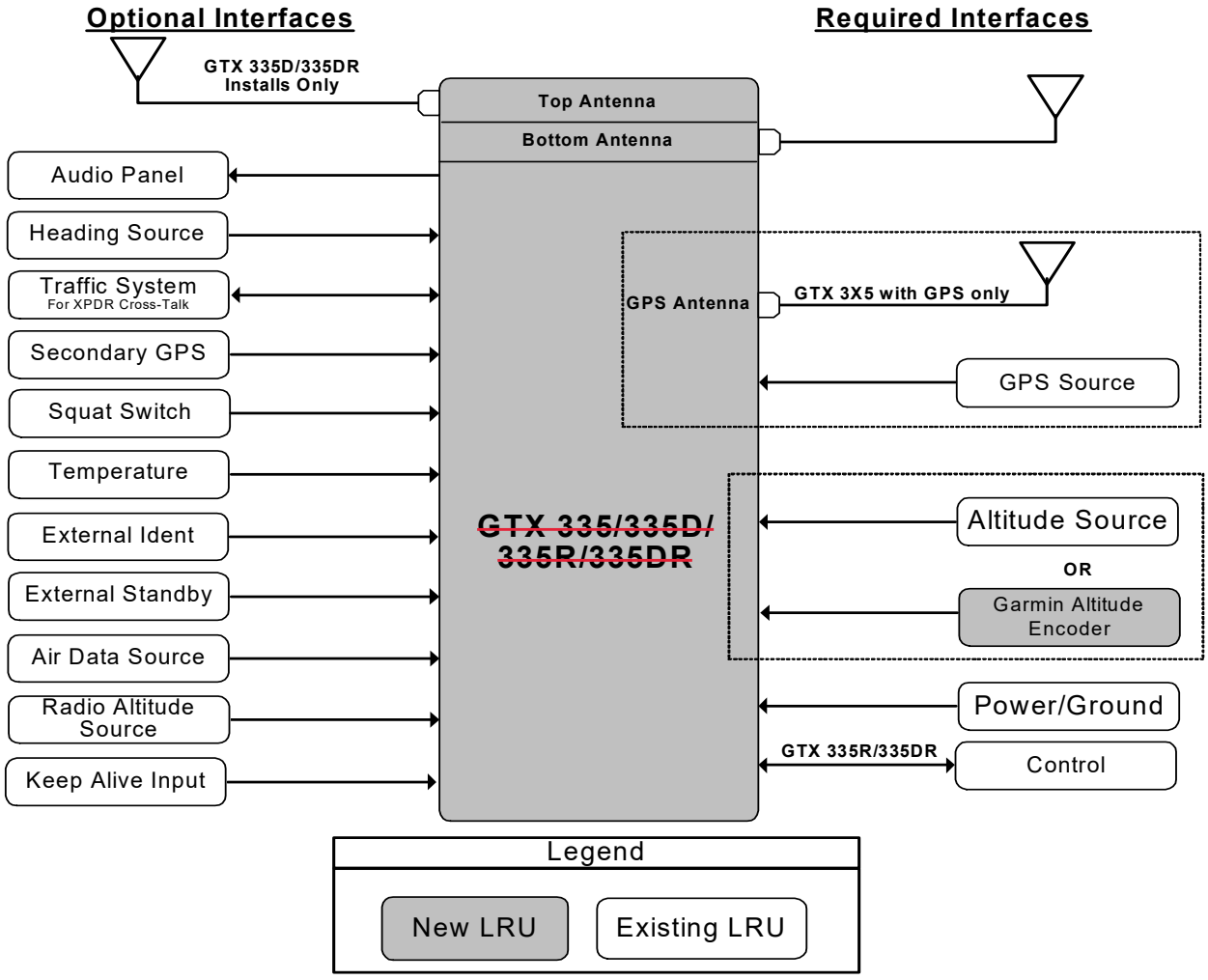

~~Figure 1-8 GTX 335/335D/335R/335DR Interface Summary~~

1.4.6 GTX 345/345D/345R/345DR

GTX 345/345D/345R/345DR units are panel or remote-mounted units that supply Mode S with ADS-B Out extended squitter and UAT and 1090 receivers for ADS-B In capabilities. The panel-mounted units have an integrated display.The remote-mounted units require an interface to a control source for normal operation and functionality. It is recommended to wire uninterrupted aircraft battery power to the GPS keep alive input of GTX 3X5/3X5R units with SBAS/GPS receivers. This preserves internal SBAS/GPS data between unit power cycles and minimizes the time required to obtain an initial position fix.

GTX 345/345D/345R/345DR features:

- Mode S transponder
- ADS-B Out capability
- ADS-B In capability with built-in 1090 MHz and 978 MHz UAT receivers
- Optional internal GNSS receiver
- Optional GAE pressure sensor module
- Entry of squawk code and flight ID
- Show squawk code and flight ID
- Show pressure altitude
- Show outside air temp
- Show density altitude
- Show flight timers
- Audio output
- Bluetooth interface to show weather and traffic on portable devices

The transponder provides an ADS-B failure message to alert that the unit has a degraded ADS-B (In or Out) system. GTX 345/345R units interface to a transponder antenna mounted to the bottom of the fuselage. GTX 345D/345DR units interface to a transponder antenna mounted to the top of the fuselage as well as an antenna mounted to the bottom.

GTX 345/345D/345R/345DR interfaces:

- HSDB
- ARINC 429
- RS-232
- RS-422
- Gray code
- Discrete I/O
- Time mark (GTX 345D/345DR only)

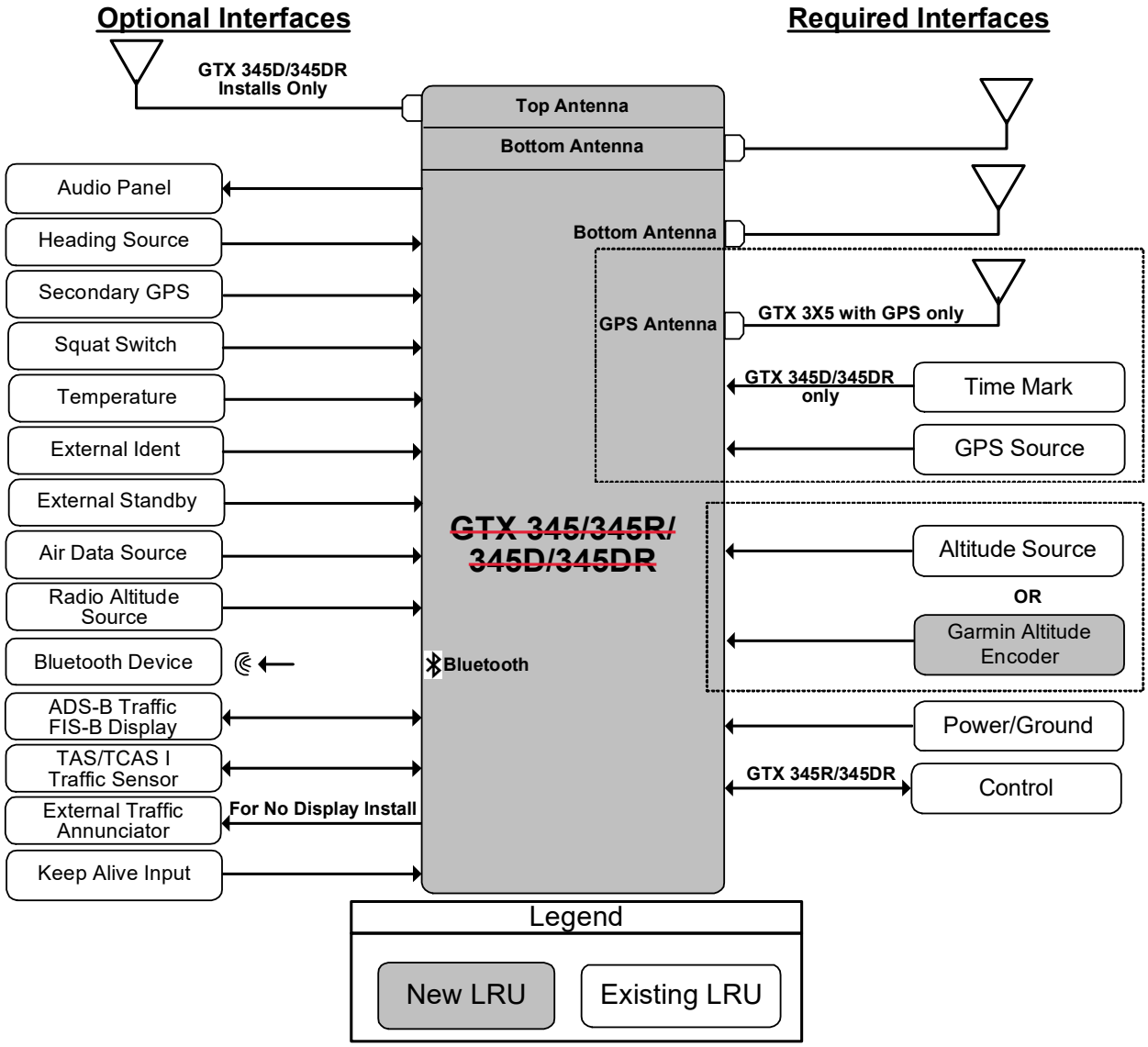

Figure 1-9 GTX 345/345D/345R/345DR Interface Summary

1.4.7 GTX 335R/335DR/345R/345DR with Specific G950/G1000

NOTE

Refer to Section 2.2.6 for limitations of this configuration when installing with a TAS/TCAS system.

Specific v15.xx and earlier G950/G1000 configurations include systems that can be updated with an interface card to allow the GTX 335R/335DR/345R/345DR unit to interface to the G950/G1000 system for ADS-B capabilities. The GTX 335R/335DR provides basic transponder capabilities with ADS-B Out functionality. The GTX 345R/345DR provides all the functions listed under the GTX 345/345D/345R/345DR section, but the ADS-B In traffic and weather will be shown as an emulation of the GDL 90 weather and traffic displays. The GTX 345R/345DR gives FIS-B weather (NEXRAD and METARS) and TIS-B traffic through the GDL 90 format. The GTX 345R/345DR provides TIS-B traffic and FIS-B weather on PEDs through Bluetooth.

- Traffic shown on specific G950/G1000 through RS-232 with the GDL 90 traffic protocol is software limited (the minimum GDU 1XXX software is v7.10 and the minimum GIA 63X software is v5.31)
- Weather shown on the G950/G1000 through RS-422 with the MX format protocol is software limited (the minimum GDU 1XXX software is v12.00 and the minimum GIA 63X software is v6.20)
- The GTX 3X5R with internal GPS is required if it interfaces to G950/G1000 systems with GIA 63W software versions not identified in the Equipment List. It is possible to use the GIA 63W as a GPS data source to the GTX for ADS-B compliance if the GIA is a known valid ADS-B Out position source

It is recommended to wire uninterrupted aircraft battery power to the GPS Keep Alive input of GTX 3X5R units with SBAS/GPS receivers. This preserves internal SBAS/GPS data between unit power cycles and minimizes the time required to obtain an initial position fix. Figure 1-10 shows the GTX 335R/335DR/GTX 345R/345DR interface for the specific v15.xx and earlier G950/G1000 system.

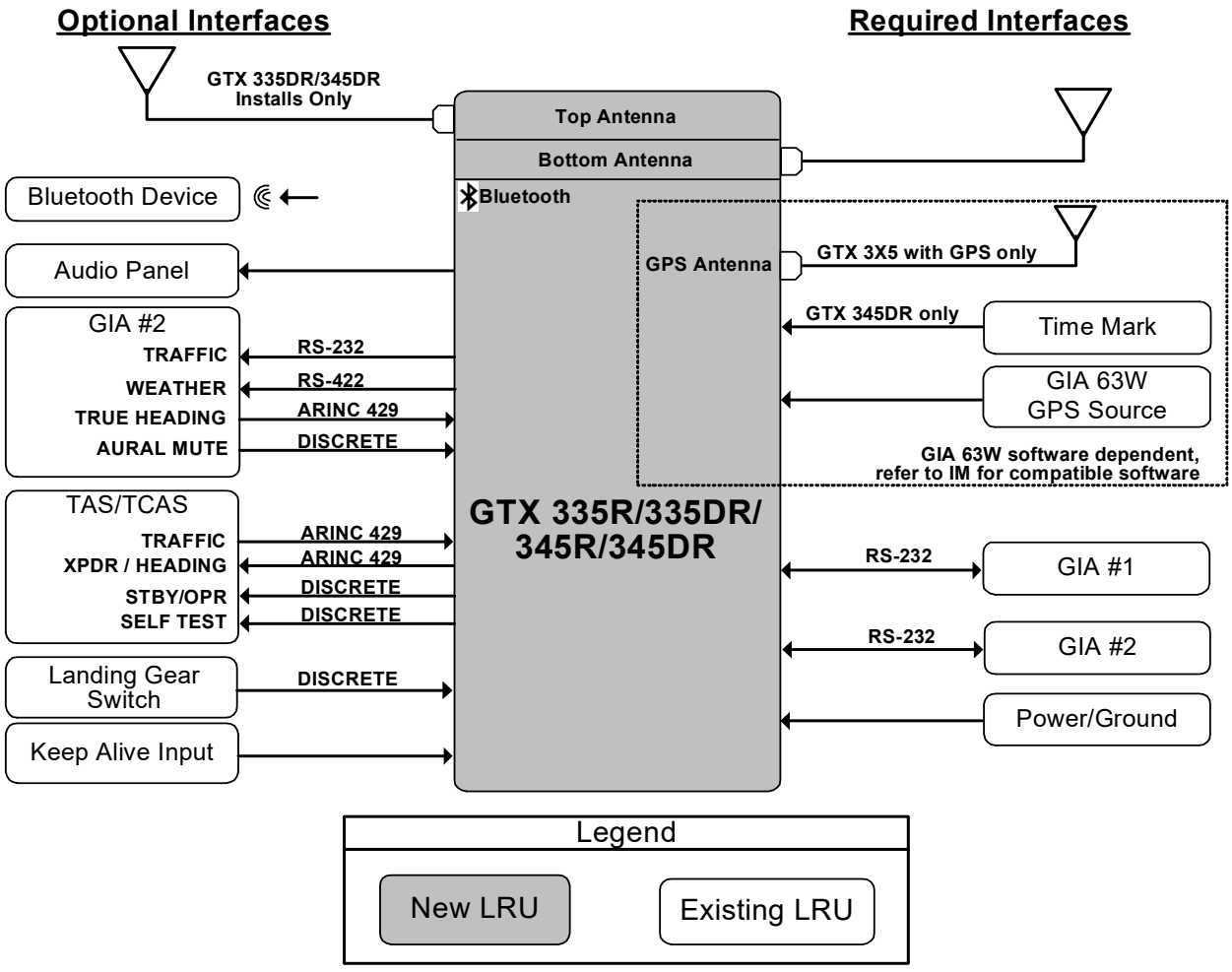

Figure 1-10 GTX 3X5R/3X5DR Specific G950/G1000 Interface Summary

1.4.8 GAE with GTX 3X5 Only

The GAE module supplies the required barometric altitude source for ADS-B Out compliance. The GAE with GTX 3X5 provides altitude to various other products via RS-232 or ARINC 429. The sensor module has an orifice that allows the module to be connected to the static system. The GAE attaches to the rear connector plate with two screws and has short, unshielded wires to connect to the GTX 3X5 unit through the rear D-sub connector with the same connection as the configuration module. The GAE contains the configuration module. If the GAE is used, a separate configuration module is not required. Refer to Section 5.5.2 for installation guidance.

Figure 1-11 GAE for GTX 3X5 Use Only

1.5 Technical Specifications

1.5.1 Power Requirements

The GTX 33/330 or GTX 3X5 units can operate at 14 or 28 VDC. Table 1-6 lists current draw specifications.

Table 1-6 Electrical Load

Unit	Characteristic	Specification	
		14 VDC	28 VDC
GTX 33/330	Maximum full TSO reply rate	3.1 A	1.6 A
	Maximum quiescent	1.1 A	0.85 A
GTX 335/335D	Input current, typical	0.57 A	0.29 A
	Input current, maximum	0.86 A	0.43 A
GTX 335, w/GPS	Input current, typical	0.72 A	0.36 A
	Input current, maximum	1.22 A	0.61 A
GTX 345/345D	Input current, typical	0.72 A	0.36 A
	Input current, maximum	1.30 A	0.65 A
GTX 345, w/GPS	Input current, typical	1.07 A	0.54 A
	Input current, maximum	1.43 A	0.72 A
GTX 335/345, w/GPS	Keep Alive input current	65 µA typical	20 µA typical
		85 µA maximum	40 µA maximum

1.5.2 Environmental Qualification Form

The installer must obtain the latest revision of the GTX Environmental Qualification Form (EQF). To obtain a copy of the EQF, refer to Garmin's Dealer Resource Center. For the applicable GTX EQF part number, refer to Table 1-7.

1.6 Reference Documentation

Table 1-7 Garmin Documents

Document	P/N
GTX 330/GTX 33/GTX 328 Environmental Qualification Form	005-00131-03
GTX 3X5 Environmental Qualification Form	005-00752-02
GTX 3X5D Environmental Qualification Form	005-01133-02
GTX 3X5 Installation Tool Guide	190-01499-30
GTX 33X and GTX 3X5 ADS-B AML STC Equipment List	005-00734-05
GTX 33X and GTX 3X5 ADS-B Maintenance Manual	190-00734-11
GTX 330/330D Mode S Transponder Pilot's Guide	190-00207-00
GTX 330/330D TSO Installation Manual	190-00207-02
G1000 System Installation Manual	190-00303-00
GTX 33/33D TSO Installation Manual	190-00906-00
GNS 400W Series Installation Manual	190-00356-08
GNS 500W Series Installation Manual	190-00357-08
AFMS, GTX 33X and GTX 3X5 AML STC	190-00734-15
GTN 625/635/650 TSO Installation Manual	190-01004-02
GTN 625/635/650 Pilot's Guide	190-01004-03
GTN 725/750 TSO Installation Manual	190-01007-02
GTN 725/750 Pilot's Guide	190-01007-03
GTN 6XX/7XX Part 23 AML STC Installation Manual	190-01007-A3
GTS Processor (825/855/8000) Installation Manual	190-00587-50
GTX 3X5 Series Transponder Pilot's Guide	190-01499-00
GTX 3X5 Series Transponder G1000 Pilot's Guide	190-01499-01
GTX 3X5 TSO Installation Manual	190-01499-02
GNS 480 (CNX80) Color GPS/NAV/COM Installation Manual	560-0982-01
Flight Stream 110/210 TSO Installation Manual	190-01700-00
14 CFR 91.227 ADS-B Out Compatible Equipment	190-01533-00

Table 1-8 Federal Aviation Administration Documents

Document	P/N
FAA Advisory Circular, Airworthiness Approval of Automatic Dependent Surveillance-Broadcast (ADS-B) Out Systems	AC 20-165( )
FAA Advisory Circular, Airworthiness Approval for ADS-B In Systems and Applications	AC 20-172A
FAA Advisory Circular, Guide for Obtaining a Supplemental Type Certificate	AC 21-40A
FAA Advisory Circular, System Safety Analysis and Assessment for Part 23 Airplanes	AC 23.1309-1E
FAA Advisory Circular, Acceptable Methods, Techniques, and Practices - Aircraft Inspection and Repair	AC 43.13-1B
FAA Advisory Circular, Acceptable Methods, Techniques, and Practices - Aircraft Alterations	AC 43.13-2B
FAA Order, Type Certification	Order 8110.4C
Major Repair and Alteration (Airframe, Powerplant, Propeller, or Appliance)	Form 337

Table 1-9 Industry Standards

Document	P/N
Standard Guide for Aircraft Electrical Load and Power Source Capacity Analysis	ASTM F2490-05
Aerospace Systems Electrical Bonding and Grounding for Electromagnetic Compatibility and Safety	SAE ARP1870

1.7 STC Permission

Consistent with FAA Order 8110.4C and FAA AC 21-40A, a permission letter to use this STC data is available for download at Garmin's Dealer Resource Center.

2 LIMITATIONS

2.1 Operational Limitations 2-2
2.2 Installation Limitations 2-3
2.2.1 Preservation of Certified Systems 2-3
2.2.2 Major Alterations 2-3
2.2.3 Equipment Interfaced to the GTX 2-3
2.2.4 Antennas 2-4
2.2.5 Pressurized Aircraft 2-4
2.2.6 Specific G950/G1000 2-4
2.2.7 Mode A/C Lock Feature 2-4

The TSO authorizations with the RTCA/DO-178B software levels by function are in G*TX 330/330D TSO Installation Manual*, *GTX 33/33D TSO Installation Manual*, and *GTX 3X5 TSO Installation Manual*.

2.1 Operational Limitations

Refer to the AFMS for operational limitations. It is available at the Garmin Dealer Resource Center. All functions of the GTX 33/330 and GTX 3X5 transponders meet the applicable design assurance qualifications for airplane Class I, II, III & IV in accordance with AC 23.1309-1E, Figure 2.

2.2 Installation Limitations

GTX 33/330 or GTX 3X5 panel-mounted units must be installed within reach of the pilot, and the display must be within pilot's eyesight. If replacing the GTX 33/330 or GTX 3X5, the unit can be installed in the same location as a previously-installed transponder.

The Air Tractor AT-401 series, AT-402 series, and AT-502 series aircraft specified on the AML must be equipped with the optional avionics mounting installation (P/N 61337-X) as a prerequisite for the installation of a panel mount transponder. If this cannot be accomplished, a remote-mounted GTX unit must be installed with an approved control source. The Air Tractor AT-504 aircraft specified on the AML must be equipped with the optional avionics mounting installation (P/N 13750-X) as a prerequisite for the installation of a panel mount transponder. If this cannot be accomplished, a remote-mounted GTX unit must be installed with an approved control source.

The GAE is certified to 30,000 feet. For altitudes above 25,000 feet, the GTX must be mounted in temperature-controlled environments in the aircraft. The limitations for both the GAE and GTX are found in the Environmental Qualification Report. For the possible LRU installation, refer to the applicable environmental qualification form to identify more GTX installation limitations.

The GTX 335 and GTX 335R units with main software v2.03 do not allow TIS-A display using the ARINC 429 interface.

Weather data is not available on G950/G1000 GDUs with software versions prior to v12.00. METAR/TAFs are not available on GDU software v13.00 through v13.07. NEXRAD is not available on GDU software v14.00, v14.01, v14.02, v14.03, v14.04, and v15.00 through v15.12. Refer to the Equipment List for affected models.

The installation of dual GTX 345 units are not approved under this STC.

2.2.1 Preservation of Certified Systems

It is the responsibility of the installer, using the data provided in this STC, to preserve the essential characteristics of the aircraft in accordance with the aircraft manufacturer's original design and the requirements of 14 CFR Part 23.

2.2.2 Major Alterations

The installation of the GTX 33/330 or GTX 3X5 system is a major alteration to the aircraft type design. After a major alteration, the aircraft must be returned to service in a procedure satisfactory to the applicable aviation authority. An example would be a completed FAA Form 337 submitted to the applicable FAA office. This form must have the major alteration to include the equipment and systems the GTX is interfaced to.

2.2.3 Equipment Interfaced to the GTX

If the GNS 480 is the control source for the GTX33/330 or GTX 3X5 transponder, it must also be the position source.

If the GNS 430W/530W and GTN 6XX/7XX are both interfaced to a GTX 33/330/335/335D/335R/335DR unit for TIS-A traffic, the GNS 430W/530W must be the control source and the GTN 6XX/7XX TIS-A control must be off.

The GTX 3X5 is not approved to interface with TCAS II traffic systems.

The GTX 33/330 or GTX 3X5 is not approved to interface with Collins Pro Line 21 equipped aircraft, which includes the Collins Radio Tuning Unit (RTU).

Additional interfaces not supported by this STC for the GTX 33/330 or GTX 3X5 are as follows:

- Installation of switches
- Installation of outside air temperature probes

2.2.4 Antennas

GTX 33/330 or GTX 3X5 units can only use transponder and SBAS/GPS antennas that comply with the requirements as specified in Section 3.10. Installation of antennas are not covered in this STC and separate approval is required. Antennas, cables, and wiring interfaced to the GTX transponder system must not be installed in fuel bays.

2.2.5 Pressurized Aircraft

Changes to the pressure vessel are not part of the *GTX 33/330 and GTX 3X5 Part 23 AML STC*. Additional data from the aircraft manufacturer or other FAA-approved data is necessary.

2.2.6 Specific G950/G1000

If there is an operational requirement to have a TAS/TCAS system installed, the active traffic system cannot interface to the GTX 345R/345DR unit for correlated traffic on the certified display. The TAS/TCAS system must directly interface to the traffic display.

NOTE

The GDL 90 interface used by the GTX 345R/345DR unit to provide ADS-B traffic data to the GIFD system does not support visual alerting of no-bearing traffic advisories (TA). These are supported by audio alerts only.

2.2.7 Mode A/C Lock Feature

The Mode A/C Lock feature is limited to installation by federal, state, and local government agencies that have received an exception under 14 CFR 91.225(f). Installation of this feature requires a feature unlock code. Contact your Garmin Dealer for more information.

The Mode A/C Lock feature is limited to panel-mounted GTX 3X5 units, as well as remote-mounted GTX 3X5R units interfaced to a GTN 6XX/7XX navigator. Remote-mounted GTX 3X5R units that are interfaced to any other control head require installation of an annunciator lamp. Installation of this annunciator lamp is not approved under this STC. Refer to *Mode A/C Lock Enablement Guide* (P/N 190-01499-21, Rev. C or later) for more information.

3 INSTALLATION OVERVIEW

3.1 Pre-Installation Information 3-3
3.2 Pre-Installation Checklist 3-4
3.3 Installation Considerations 3-6
3.3.1 Bluetooth Reception Verification 3-6
3.4 Minimum System Configurations 3-8
3.4.1 GTX 330/330D or GTX 33/33D ADS-B Out Installation 3-8
3.4.2 GTX 335/335R ADS-B Out Installation 3-8
3.4.3 GTX 345/345R ADS-B Out and ADS-B In Installation 3-9
3.4.4 No Display Traffic Alerting (GTX 345/345R Only) 3-9
3.5 Wireless Interface to PED (GTX 345/345R Only) 3-10
3.6 External Sensors, Devices, and Interface Considerations 3-11
3.6.1 Equipment Not Included in this STC 3-11
3.6.2 Control and Display Source 3-11
3.6.3 Altitude Source 3-12
3.6.4 Heading Source 3-14
3.6.5 GPS Source 3-15
3.6.6 Radio Altimeter Source 3-16
3.6.7 Mutual Suppression Bus 3-16
3.6.8 Air/Ground Determination 3-16
3.6.9 External Traffic System (GTX 345/345R Only) 3-16
3.6.10 Traffic System in Non-G1000 3-17
3.6.11 Traffic System in Specific G950/G1000 3-17
3.6.12 Installation with Other ADS-B Out Systems 3-18
3.7 Placards/Labels 3-19
3.8 Switches and Annunciators 3-19
3.9 Cooling 3-19
3.10 Transponder Antenna Considerations 3-20
3.10.1 Transponder Antenna Location 3-20
3.10.2 Transponder Antenna Installation 3-21
3.11 GPS Antenna Considerations (GTX 3X5 with SBAS/GPS) 3-22
3.11.1 GPS Antenna Location 3-23
3.11.2 GPS Coaxial Cable Requirements 3-25
3.12 General Installation Practices 3-26
3.12.1 Circuit Protection and Power Distribution 3-26
3.12.2 Audio Interference 3-26
3.13 Cable and Wiring 3-27
3.13.1 Pressurized Aircraft 3-27
3.13.2 Shield Termination 3-27
3.14 General Electrical Bonding 3-28
3.14.1 Aluminum Surface Preparation 3-30
3.14.2 Bonding Jumper 3-31
3.14.3 Transponder Antenna Bonding 3-32
3.14.4 GPS Antenna Bonding 3-33
3.15 Electrical Load Analysis 3-34
3.15.1 Aircraft without Existing Electrical Load Analysis 3-34
3.15.2 Electrical Load is Decreased After Modification 3-34

3.15.3 Electrical Load is Increased After Modification 3-34
3.15.4 Performing an Electrical Load Analysis by Measurement 3-35
3.15.5 Battery Capacity Analysis 3-42

3.1 Pre-Installation Information

This section contains instructions for:

- Installation and related hardware necessary for GTX 33/330 or GTX 3X5 series units
- Requirements for selection of correct locations in aircraft
- Requirements for support structures, mechanical alignment, and wire installation
- Any restrictions or requirements on nearby equipment

Considerations

When installing a GTX 33/330 or GTX 3X5 transponder in an aircraft with an existing transponder, consider that current FAA guidance allows multiple ADS-B Out transmissions on both links if the ICAO aircraft identifier is provided on both systems.

If multiple ADS-B Out systems are installed on the aircraft, all systems must be compliant at the time the aircraft is equipped with any fully complaint ADS-B Out system. This is accomplished by either disabling the earlier version of ADS-B Out or upgrading it to meet full compliance requirements. For additional information, refer to Section 3.6.12.

GTX 33/330

The GTX 33/330 transponder requires the optional extended squitter (ES) upgrade for ADS-B functionality. Unit group includes:

- GTX 330/33D panel mount units
- GTX 33/33D remote mount units

GTX 3X5

The GTX 3X5 transponder provides ADS-B functionality. It features an optional Garmin Altitude Encoder (GAE) to meet the required barometric pressure altitude source. An optional internal GPS/SBAS source is available to meet the required GNSS position source integrity for ADS-B Out. Unit group includes:

- GTX 335/335D/345/345D panel mount units
- GTX 335R/335DR/345R/345DR remote mount units

GTX 345/345R units feature ADS-B In functionality to approved displays. ADS-B In provides TIS-B and FIS-B data through UAT 978 MHz and 1090 MHz.

3.2 Pre-Installation Checklist

Before beginning a GTX system installation, prerequisites for specific aircraft must be met under this STC. Complete the applicable pre-installation checklist to verify the necessary requirements are met.

Table 3-1 GTX without Specific G950/G1000 Pre-Installation Checklist

Prerequisite	Reference	Required						Complete
		GTX 330/330D	GTX 33/33D	GTX 335/335D/ 335R/335DR	GTX 335/335R with GPS	GTX 345/345D/ 345R/345DR	GTX 345/345R with GPS	
Aircraft is on AML.	AML	✓	✓	✓	✓	✓	✓	❑
Approved uncorrected pressure altitude source or GAE option installed.	Appendix C	✓	✓	✓	✓	✓	✓	❑
Approved control source for remote units installed (GTN 6XX/7XX, GNS 480 (CNX80)).	Appendix C		✓ [1]	✓ [1]	✓ [1]	✓ [1]	✓ [1]	❑
~~Adequate Bluetooth reception verified for GTX 345R installation.~~	Section 3.5					✓	✓	❑
Approved SBAS/GPS system installed.	Appendix C	✓	✓	✓		✓		❑
Applicable SBAS/GPS antenna installed.	Section 3.11	✓	✓	✓	✓	✓	✓	❑
Applicable transponder antenna installed.	Section 3.10	✓	✓	✓	✓	✓	✓	❑
Applicable mounting provisions have been identified.	Section 5	✓	✓	✓	✓	✓	✓	❑
Applicable electrical bonding provisions have been identified.	Section 3.14	✓	✓	✓	✓	✓	✓	❑
Planned equipment interfaces are approved under the STC or have other FAA approval.	Appendix C	✓	✓	✓	✓	✓	✓	❑
Installation/operational limitations reviewed verify adverse impact to installation.	Section 2	✓	✓	✓	✓	✓	✓	❑
Aircraft electrical system is sufficient for the installation.	Section 3.15	✓	✓	✓	✓	✓	✓	❑
Aircraft doesn't have TCAS II system.	Section 2	✓	✓	✓	✓	✓	✓	❑
Aircraft does not have a Rockwell Collins Radio Tuning Unit (RTU).	Section 2	✓	✓	✓	✓	✓	✓	❑

Notes:

[1] Required for GTX remote mount units only.

Table 3-2 GTX 3X5 with Specific G950/G1000 Pre-Installation Checklist

Prerequisite	Reference	Required				Complete
		GTX 335R/ 335DR	GTX 335R with GPS	GTX 345R/ 345DR	GTX 345R with GPS	
Aircraft is on AML.	AML	✓	✓	✓	✓	❑
Required G950/G1000 software installed.	Section 1.4.7	✓	✓	✓	✓	❑
Applicable GIA 63W software installed.	Section 1.4.7	✓		✓		❑
Applicable SBAS/GPS antenna installed.	Section 3.11		✓		✓	❑
Adequate Bluetooth reception verified for GTX 345R installation.	Section 3.5			✓	✓	❑
Applicable mounting provisions have been identified.	Section 5	✓	✓	✓	✓	❑
Applicable electrical bonding provisions have been identified.	Section 3.14	✓	✓	✓	✓	❑
Planned equipment interfaces are approved under the STC or other FAA approval.	Appendix C	✓	✓	✓	✓	❑
Installation/operational limitations reviewed to verify no adverse impact to installation.	Section 2	✓	✓	✓	✓	❑
Aircraft electrical system is sufficient for installation.	Section 3.15	✓	✓	✓	✓	❑
Aircraft does not have a TCAS II system.	Section 2	✓	✓	✓	✓	❑

3.3 Installation Considerations

NOTE

Installation instructions are intended to follow the aircraft manufacturer standard practices for maintenance and repair. Alternate methods, techniques, and practices defined in AC 43.13-1B, Aircraft Inspection and Repair, Chapters 1 through 4 and in AC 43.13-2B Aircraft Alterations, Chapter 2 are acceptable.

- Installation of a GTX 33/330 or GTX 3X5 system may require the existing remote equipment shelf, avionics console, or the aircraft instrument panel be modified or replaced
- A new wiring harness is required
- The aircraft's existing static pressure system may have to be modified to include connections to a compatible altitude encoder, if a compatible encoder is not installed. Refer to the minimum system configurations for additional considerations
- The selected location for unit installation must meet the structural and electrical requirements detailed in Section 5.

Installation Planning

1. Complete an Electrical Load Analysis on the aircraft to verify aircraft electrical system can carry GTX electrical load.
2. Determine installation location for GTX.
3. Verify the mounting rack is sufficient for selected location.
4. Complete a weight and balance to verify the location is in permitted limits.
5. ~~Verify the Bluetooth reception is sufficient for GTX 345R units.~~
6. Determine the cable routing.
7. Verify the interfaced equipment is sufficient and correct approval is possible.
8. Any other necessary modifications.
9. Prepare the mounting rack for installation.
10. Plan the post-installation checkout prior to closing out the work area.

~~3.3.1 Bluetooth Reception Verification~~

~~**NOTE**~~

~~*For optimal connectivity, the Bluetooth antenna must point towards the passenger area of the aircraft (i.e., the Garmin label should face the pilot). However, due to aircraft obstructions, Bluetooth performance may be limited in remote units. To obtain ideal Bluetooth performance with remote units, use a Flight Stream 110/210.*~~

~~A pre-installation verification checkout is recommended to verify the GTX 345R Bluetooth feature has the capability to connect during normal aircraft operation. This ensures the location for GTX 345R installation can connect to PEDs.~~

- ~~Load PC based Install Tool, as described in Section 7.3~~
- ~~Use Figure 3-1 to temporarily power on and configure GTX 345R unit~~
- ~~Complete Table 3-3 prior to the installation of GTX 345R units to verify Bluetooth reception~~

If the GTX 345R interfaces to a Flight Stream 110/210 or 510 device, then disable the GTX 345/345R Bluetooth functionality. It is not necessary to complete the GTX 345R verification check. For G950/G1000 systems, if the GTX 345R is installed in the G1000 system rack behind the MFD or PFD, it is not necessary to perform the verification check.

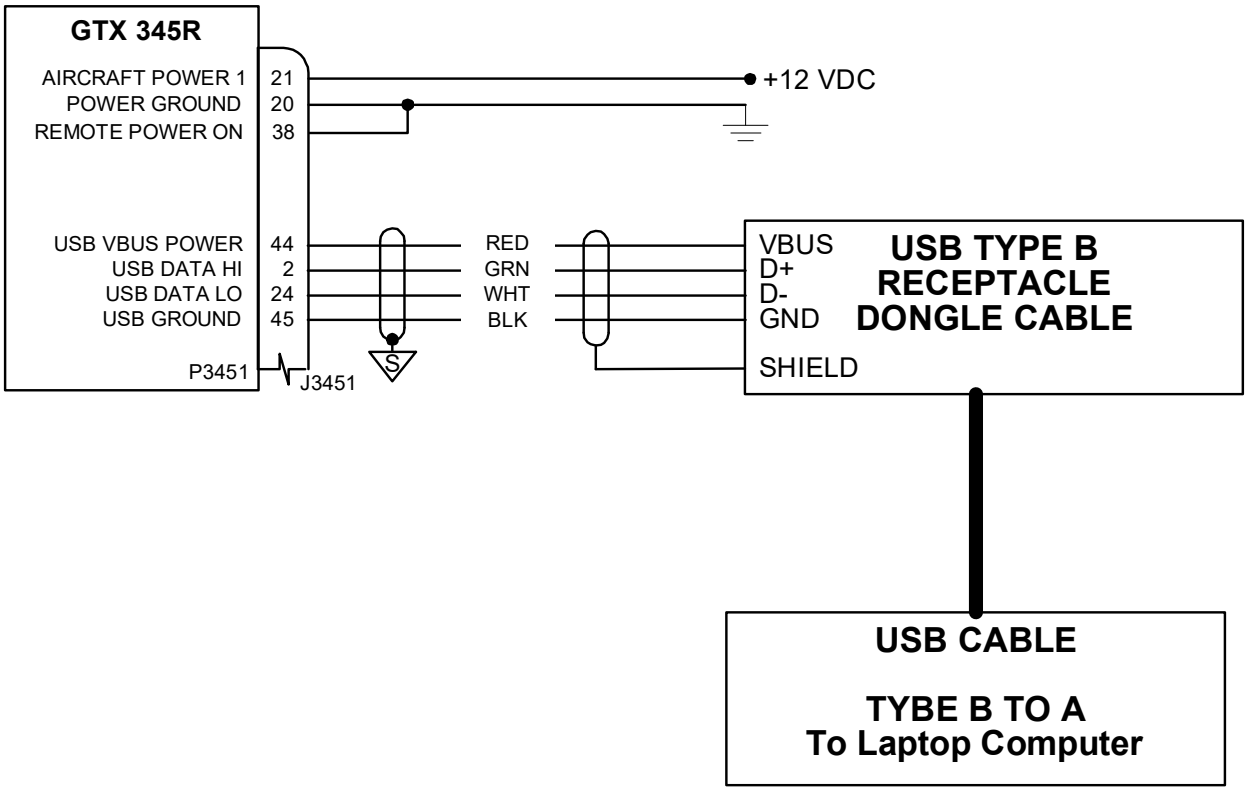

Figure 3-1 Test Harness for Bluetooth Verification

Table 3-3 Bluetooth Reception Verification Check

Item	Step	Complete
1	Identify GTX 345R location for installation.	☐
2	Temporarily place GTX 345R unit in location for installation.	☐
3	Power on unit.	☐
4	Use GTX 3X5 Install Tool to verify Bluetooth is selected.	☐
5	Temporarily install panels or hatches equivalent to the installation with the GTX 345R powered on and Bluetooth selected.	☐
6	Pair a PED with a Garmin Pilot account to the GTX 345R. Verify there is satisfactory reception and connectivity for pilot and crew.	☐
7	If reception and connectivity are not sufficient, move unit until performance is satisfactory.	☐

3.4 Minimum System Configurations

3.4.1 GTX 330/330D or GTX 33/33D ADS-B Out Installation

Existing GTX 33/330 Upgrade

The GTX 33/330 is ADS-B compliant if it is identified in the equipment list. If it is not identified in the equipment list, then the unit must be upgraded or replaced. To be ADS-B Out compliant, software, configuration, and interface to an approved position source must be completed as shown in this manual.

- Software update is in accordance with the procedures (refer to Section 6)
- An approved position source is connected to the GTX (refer to Appendix C)
- Transponder is configured in accordance with the post-installation configuration (refer to Section 7)
- For remote GTX installations (refer to Section 7):
  - Verify transponder is configured with the GTN or GNS 480 as a control source
- Complete all checkout instructions and include all documentation requirements (refer to Section 8)
  - Inspect the installation to verify design data is in compliance with this manual

New GTX 330/330D or GTX 33/33D Installations

For a list of approved interfaces, refer to Appendix C.

- GTX 330/330D or GTX 33/33D Transponder
- Transponder antenna(s)
- Approved GPS/SBAS source
- Approved GTX 33/33D control source for remote-mounted units only
- Approved altitude source

~~**3.4.2 GTX 335/335R ADS-B Out Installation**~~

~~The minimum system required items for GTX 335/335R ADS-B Out (only) installation are listed below. For a list of approved interfaces, refer to Appendix C.~~

- ~~GTX 3X5 Transponder~~
- ~~Transponder antenna~~
- ~~Approved GPS/SBAS source~~
  - ~~GTX 335/335R with optional internal GPS/SBAS receiver~~
- ~~Approved GPS/SBAS antenna~~
- ~~Approved GTX 335R control source for remote-mounted units~~
- ~~Approved altitude source~~
  - ~~Optional GAE~~

3.4.3 GTX 345/345R ADS-B Out and ADS-B In Installation

The minimum system required items for GTX 345/345R ADS-B In and Out installation are listed below. For a list of approved interfaces, refer to Appendix C.

- GTX 345/345R Transponder
- Transponder antenna
- Approved GPS/SBAS source
  - GTX 345/345R with optional internal GPS/SBAS Receiver
- Approved GPS/SBAS antenna
- Approved GTX 345R control source for remote-mounted units only
- Audio panel
- Approved altitude source
  - Optional GAE
- Approved ADS-B In display source for TIS-B and FIS-B

3.4.4 No Display Traffic Alerting (GTX 345/345R Only)

For GTX 345/345R installations without a traffic display, a traffic system annunciator and the audio output must be connected as shown in Appendix B to provide audible and visual traffic alerts. This includes GTX 345 panel mount installations without a traffic display and a remote-mounted GTX 345R with a GNS 480 (traffic display not available for TIS-B). Traffic can be shown on an optional Bluetooth-enabled Portable Electronic Device (PED) compatible with Garmin Pilot software.

The following are required for remote mount GTX 345R installations with a GNS 480 or panel mount GTX 345 installations without a traffic display. The minimum system required items for GTX 345/345R no display traffic alerting. For a list of approved interfaces, refer to Appendix C.

- GTX 345/345R Transponder
- Transponder antenna
- Approved GPS/SBAS source
  - GTX 345/345R with optional internal GPS/SBAS receiver
- Approved GPS/SBAS antenna
- Approved GTX 345R control source for remote-mounted units only
- Audio panel
- Approved altitude source
  - Optional GAE
- Traffic annunciator (refer to Section 5)

3.5 Wireless Interface to PED (GTX 345/345R Only)

This section contains information for the use of PEDs to show ADS-B (FIS-B, TIS-B) data through Bluetooth when connected to the GTX 345/345R. A PED with an operational Garmin Pilot account is required.

If the GTX 345 (not a Flight Stream 110/210 or 510) is interfaced to a PED, it will provide attitude to the interfaced PED. This type of installation requires calibration of the AHRS. Refer to Section 5 for installation and Section 7.2.5 for configuration.

The GTX 345/345R must be installed such that one side of the unit is within ±30° of the aircraft centerline. For more information, refer to Figure 7-16. If the GTX 345/345R Bluetooth is not enabled, the ±30° limitation does not apply.

The GTX 345/345R units are approved to interface to a Flight Stream 110/210 to supply ADS-B data to a PED through the Flight Stream Bluetooth. The Flight Stream installation provides a Bluetooth option if the GTX 3X5R does not pass the checkout in Section 3.6.

If the GTX 345/345R unit interfaces to a Flight Stream 110/210 unit, the GTX 345/345R internal Bluetooth must be disabled through the GTX 3X5 Installation Tool.

Refer to *Flight Stream 110/210 TSO Installation Manual* for applicable checkout procedures.

3.6 External Sensors, Devices, and Interface Considerations

When the GTX 33/330 and GTX 3X5 transponders are interfaced to external sensors, the sensors must be installed in accordance with the sensor manufacturer's data. This manual does not include data for the installation, attachment, or approval of any external sensors or devices. For additional details on permitted inputs and configurations, refer to Section 7 and Appendix C.

The GTX accepts data from many sources. If more than one source is used, the GTX will accept data as given in this section. The input priority of each external data source cannot be changed.

3.6.1 Equipment Not Included in this STC

Additional analysis and approval is required for interfaces not covered in this installation manual. This STC does not include the following systems:

- TCAS II systems
- Rockwell Collins Pro Line 21 system

3.6.2 Control and Display Source

When installed, an approved control source is required to operate the remote mount unit.

This STC approves the installation and interface of a GTX 3X5 in some aircraft with a G950/G1000. The G950/G1000 system provides the transponder controls when interfaced to the GTX 3X5.

The GTX 345/345R units supply ADS-B In to approved displays. Units that are approved as a control or display source are as follows:

Table 3-4 Approved Control and Display Sources

Unit	Control	ADS-B Traffic	ADS-B Weather
GTN 6XX/7XX	RS-232	HSDB	HSDB
GNS 480	RS-232	N/A	N/A
GNS 4XX/5XX	N/A	ARINC 429	RS-232
G950/G1000	RS-232	RS-232 [1] [2]	RS-422 [1] [3]
Gables 7534	ARINC 429	N/A	N/A
MX20/GMX 200	N/A	RS-422	RS-422
GDU 620	N/A	HSDB	HSDB
GI 275	HSDB	HSDB	HSDB [4]

Notes:

[1] The G950/G1000 interface includes select aircraft models and software versions.

[2] Must have GDU software v7.10 or later and GIA 63(W) software v5.31 or later to display traffic.

[3] Must have GDU software v12.00 or later and GIA 63(W) software v6.20 or later to display weather.

[4] Must have GTX main software v2.60 or later, ADS-B software v3.21 or later, and GI 275 software v2.30 or later for transponder control.

The GTX 345R can interface with an approved active traffic source. However, for aircraft with a G950/G1000, pilot control is removed from the display. The TAS/TCAS system is controlled with the GTX air/ground logic. The system is automatically put into Operating mode when airborne and in Standby mode when on the ground.

~~The GTX 3X5 Installation Tool provides additional functions:~~

- ~~Selection of Operate mode for the external traffic sensor to do TAS/TCAS traffic inspections~~
- ~~Traffic self-test to do a system traffic test of the TAS/TCAS system~~
- ~~The Install Tool provides a Ground Test feature for installers to place the transponder in an airborne state to conduct the required transponder checks. For GDU software v15.00 and later, the Ground Test feature exists on the MFD. Refer to Section 8 for additional details.~~

3.6.3 Altitude Source

Altitude Input

For ADS-B operation, an altitude encoder, air data computer, or other source that supplies uncorrected pressure altitude information must be installed. The following are formats in which the GTX 33/330 and GTX 3X5 receives external air data. For a list of compatible altitude sources, refer to Appendix C.

- ARINC 429
- RS-232
- Gray code
- GAE (GTX 3X5 only)
- HSDB (GTX 345 only)

The GTX 33/330 and GTX 3X5 require a source of uncorrected pressure altitude. The GTX accepts altitude information from an altitude encoder, air data computer, EFIS, or encoding altimeter. For more information, refer to Table 3-5. For a list of compatible altitude sources, refer to Appendix C.

Table 3-5 Altitude Source Options

Altitude Source	Transponder Unit
ARINC 429	GTX 33/330 and GTX 3X5
RS-232	GTX 33/330 and GTX 3X5
Gray Code	GTX 33/330 and GTX 3X5
GAE	GTX 3X5 (Only)
HSDB	GTX 345 (Only)

Multiple Uncorrected Pressure Altitude Source

The GTX accepts uncorrected pressure altitude from many sources. If more than one source of altitude data is supplied to the GTX, only valid data from the highest priority source is used. If the highest priority source becomes unavailable, then the data comes from the next-highest priority source. The priorities of the altitude sources are as follows (from highest to lowest);

Table 3-6 Multiple Pressure Altitude Source Priority

Priority	Altitude Source	Transponder Unit
1	ARINC 429 Label 203 from an ADC	GTX 33/330 and GTX 3X5
2	ARINC 429 Label 203 from an EFIS/ADC	GTX 33/330 and GTX 3X5
3	RS-232 from an ADC	GTX 33/330 and GTX 3X5
4	RS-232 from a 25 ft-resolution altitude source	GTX 33/330 and GTX 3X5
5	RS-232 from a remote control panel	GTX 33/330 and GTX 3X5
6	GAE	GTX 3X5 only
7	HSDB pressure altitude from NAV #1	GTX 345/345R
8	HSDB pressure altitude from NAV #2	GTX 345/345R
9	HSDB pressure altitude from G500/G600 GDU #1	GTX 345/345R
10	HSDB pressure altitude from G500/G600 GDU #2	GTX 345/345R
11	Gray code altitude	GTX 33/330 and GTX 3X5
12	RS-232 from a 100 ft-resolution altitude source	GTX 33/330 and GTX 3X5

A primary and secondary pressure altitude source can be configured and selected using a configurable discrete switch. Configuration of this option will utilize the following priorities.

Table 3-7 Pressure Altitude Source Selection #1

Altitude Data Select Discrete	Source
Open	Source specified in altitude source configuration 1
Ground	Source specified in altitude source configuration 2

Table 3-8 Pressure Altitude Source Priority Order #1

Priority	Source
1	Source specified in altitude source configuration 1
2	Source specified in altitude source configuration 2

3.6.4 Heading Source

The heading data is used in ADS-B Out transmissions to give more ownship information. The GTX accepts aircraft heading input information from:

- ARINC 429
- RS-232
- HSDB sources (GTX 345/345R units only)

The supply of ownship heading to the GTX 345/345R improves correlation performance when it includes an external traffic system. The GTX includes ownship heading information in the ADS-B Out transmission, if available. For details, refer to Table 3-9. For a list of compatible equipment, refer to Appendix C.

The GTX 345/345R units use True Heading information for better correlation performance when connected to an external traffic system. If True heading is not available, the unit can use the magnetic variation (if supplied) to help with traffic correlation. Refer to Table 3-9 for the list of possible heading selections.

Verify the LRU that supplies the heading supplies the correct heading label. Refer to Appendix C for approved heading sources.

Table 3-9 Heading Source Options

True Heading Data Source	Heading Source	Transponder Unit
ARINC 429 Label 314	True Heading	GTX 33/330 and GTX 3X5
RS-232	True Heading	GTX 3X5
HSDB	True Heading	GTX 345/345R
ARINC 429 Label 320	Magnetic Heading	GTX 33/330 and GTX 3X5
RS-232	Magnetic Heading	GTX 33/330 and GTX 3X5
HSDB	Magnetic Heading	GTX 345/345R
RS-232	Magnetic Variation	GTX 345/345R

Multiple Heading Sources

The GTX accepts heading data from multiple sources. If multiple sources of heading data are supplied, then only correct data from the highest priority source is used. If the highest priority source becomes unavailable, then the next-highest priority source supplies the data. The priorities of the heading sources are as follows (from highest to lowest):

Table 3-10 Multiple Heading Source Priority

Priority	Heading Source	Transponder Unit
1	ARINC 429 Label 314 from heading	GTX 33/330 and GTX 3X5
2	ARINC 429 Label 320 from heading	GTX 33/330 and GTX 3X5
3	ARINC 429 Label 314 from AHRS	GTX 33/330 and GTX 3X5
4	ARINC 429 Label 320 from AHRS	GTX 33/330 and GTX 3X5
5	ARINC 429 Label 314 from EFIS	GTX 33/330 and GTX 3X5
6	ARINC 429 Label 320 from EFIS	GTX 33/330 and GTX 3X5
7	RS-232 True Heading from remote control panel	GTX 3X5
8	RS-232 Magnetic Heading from remote control panel	GTX 33/330 and GTX 3X5
9	HSDB True Heading	GTX 345/345R
10	HSDB Magnetic Heading	GTX 345/345R

3.6.5 GPS Source

For the transponder to send precision and integrity information required by AC-20-165( ) Version 2 compliant equipment, the Garmin GPS unit's RS-232 serial output must be configured to the extended ADS-B format. This is shown through selections with a "+" in the selections title (e.g., ADS-B OUT+, GTX Mode S+, Panel GTX w/TIS+).

The ADS-B Version 2 approval requires an approved GPS/SBAS source. For installers to use a GPS navigator other than those specified in the approved Equipment List, additional approval is required. This STC only approves those GPS/SBAS part numbers listed in the approved Equipment List. Both hardware part numbers and software versions of the GPS/SBAS unit must meet the requirements listed in the approved Equipment List. If a software update is required, the installer must go to the Garmin Dealer Resource Center or contact Garmin for updated information. It is possible that navigator installations can meet the hardware requirements but not have the correct version of software installed.

GTX 33/330 series transponders must have an external GPS/SBAS source that complies with ADS-B requirements. The GTX 3X5 can use an external GPS/SBAS input or use the optional internal GPS/SBAS receiver (only specific models of the GTX 3X5 are equipped with internal GPS). *GTX 33X and GTX 3X5 ADS-B AML STC Equipment List* provides a list of approved GPS receiver part numbers and software combinations that can interface to the GTX to meet the equipment requirements specified in 14 CFR 91.227.

The GTX 33/330 or GTX 3X5 requires a GPS/SBAS source for ADS-B Out and In. The GTX accepts GPS data from approved sources and software versions to supply the required information. Refer to Appendix C for a list of compatible GPS sources.

If more than one source of GPS data is supplied, then the GTX will automatically select the best source. If the quality criteria of the GPS sources are equal, then the GPS source is pulled from GPS source 1. The GTX 3X5 receives from internal and external GPS receivers:

- Latitude
- Longitude
- Height above ellipsoid
- Horizontal and vertical position accuracy data
- Horizontal position integrity data
- North/south velocity
- East/west velocity
- Up/down velocity
- Ground speed
- Horizontal velocity accuracy
- Ground track
- Geometric vertical rate
- SIL and SIL supplement
- RAIM alarm
- Geoid altitude
- Time
- Date
- Height above terrain

3.6.6 Radio Altimeter Source

NOTE

For GTX 33/330 units, software v8.02 or later is required for this interface.

The radar altimeter input is used to determine the Conflict Situational Awareness (CSA) for decreased sensitivity levels or can help determine the airborne state of the aircraft.

- Refer to Appendix C for compatible radio altimeter sources and equipment configuration
- Refer to Appendix B for equipment interconnect diagrams

Table 3-11 Radar Altimeter Priority List

Priority	Source	Unit	Transponder Unit
1	ARINC 429 Label 164	Radar Altimeter	GTX 33/330 and GTX 3X5
2	ARINC 429 Label 164	EFIS/ADC	GTX 33/330 and GTX 3X5
3	RS-232	Remote Control Unit	GTX 33/330 and GTX 3X5
4	HSDB Height Above Terrain	Approved HSDB source #1	GTX 345/345R only
5	HSDB Height Above Terrain	Approved HSDB source #2	GTX 345/345R only

3.6.7 Mutual Suppression Bus

Other equipment on the aircraft can transmit and receive in the same frequency band as the GTX transponder system, such as DME, TAS/TCAS system, or another transponder. Mutual Suppression is a synchronous pulse that is sent to the other equipment to suppress transmission of a different transmitter/receiver during the pulse train transmission. The GTX transmission can be suppressed by an external source and other equipment on board can be suppressed by the GTX system. This feature is designed to reduce mutual interference.

If a transponder, DME, or TAS/TCAS system using the L-band is installed on the aircraft, a suppression line must be connected between the GTX transponder system and the other equipment in order to prevent mutual interference. For the GTX 33/330 and GTX 3X5 series transponder systems, and other equipment I/O interconnect drawings, refer to Appendix B.

Certain I/O pulses may not be compatible with all models of DME. Known incompatible units include the Bendix/King KN 62, KN 64, and KNS 80. These models have an output-only suppression and may damage the GTX mutual suppression output. In this case, leave the suppression pin open.

3.6.8 Air/Ground Determination

The GTX system will change automatically to an airborne state if it senses the aircraft has become airborne. Depending on configuration settings, the GTX can determine the air/ground state through a discrete input or an assortment of inputs from a GPS source, radio altimeter source, or air data source.

~~3.6.9 External Traffic System (GTX 345/345R Only)~~

~~The GTX 345/345R interfaces to an external TAS or TCAS system for traffic correlation and control. The external traffic system requires its minimum inputs (e.g., pressure altitude, heading).~~

- ~~Refer to Appendix C for compatible traffic systems~~
- ~~Refer to Section 7 for equipment configuration~~
- ~~Refer to Appendix B for equipment interconnect diagrams~~

3.6.10 Traffic System in Non-G1000

The GTX 345/345R supplies correlated traffic to approved displays. Optional discrete connections can be used to automatically put the external traffic system in Operate or Standby mode depending on the air/ground state of the aircraft. The unit is capable of providing a self-test command to the external traffic system through a discrete connection. Refer to Appendix B for interconnect diagrams.

The GTX 345/345R provides the audio to the audio panel. The external traffic system must not interface to the audio panel if it is interfacing to the GTX 345/345R for correlated traffic. The exception is with external traffic systems that include EGPWS/TAWS (e.g., KMH 880/980). Refer to Appendix B for additional details.

3.6.11 Traffic System in Specific G950/G1000

The GTX 345/345R provides correlated traffic through the GDL 90 format on the G950/G1000 system. This requires the active traffic system to be de-configured from the G950/G1000 system. This replaces the G950/G1000 control of the TAS/TCAS system with controls from the GTX. The GTX must be configured for the applicable traffic system in accordance with Section 7.

It must be wired as shown in Appendix B. The discrete interfaces (Standby, Operate, and Self-test) are required connections from the GTX to the TAS/TCAS system, if applicable. The GTX monitors the air/ground state of the aircraft and the operational state of the TAS/TCAS system. It automatically places the traffic system in the correct mode.

The GTX 3X5 Installation Tool is required for scheduled operational checks on the transponder and TAS/TCAS system. With the exception of GDU software v15.XX, the ground test function on the MFD places the transponder into an airborne state in order to conduct the necessary checks. The Installation Tool is still required for the TAS/TCAS system.

An external traffic system operate function, located on the ***State*** page of the GTX 3X5 Installation Tool, allows the GTX to override the air/ground state of the aircraft and place the external traffic system in Operate mode. This function allows the maintainer to conduct any required TAS/TCAS system tests and inspections. An external traffic self-test function, located on the ***State*** page of the GTX 3X5 Installation Tool, allows the GTX to put the external traffic system in Self-test mode to ensure the traffic picture is accurate and wiring is connected correctly.

The GTX 345/345R provides the audio to the audio panel. The external traffic system should not interface to the audio panel if it is interfacing to the GTX 345/345R for correlated traffic. The exception is with external traffic systems that include EGPWS/TAWS (e.g., KMH 880/980). Refer to Appendix B for additional details.

3.6.12 Installation with Other ADS-B Out Systems

If the GTX 33/330 or GTX 3X5 transponder is installed in an aircraft with other ADS-B Out capable equipment, then the other ADS-B Out equipment must be Version 2 compliant (TSO-C166b/RTCA DO-260B or TSO-C154c/DO-282B). The UAT or 1090 ES transmit functionality of a Version 1 compliant system must be disabled if it is not upgraded to be Version 2 compliant.

Table 3-12 identifies actions to verify only Version 2 compliant ADS-B and UAT systems are able to transmit.

Table 3-12 Version 2 Compliance with Installation of Multiple ADS-B Out Equipment

Equipment	If the other ADS-B Out System is:	Action
GTX 33/330 or GTX 3X5 with ADS-B Out (TSO-C166b/ DO-260B) (ADS-B Version 2 compliant)	TSO-C154c / DO-282B UAT equipment (UAT Version 2 compliant)	None. Both systems are Version 2 compliant.
	TSO-C154b / DO-282A UAT equipment (UAT Version 1 compliant)	Option 1: Upgrade UAT equipment to be Version 2 compliant. Contact equipment manufacturer for possible upgrade selections.
		Option 2: Disable transmit functionality of Version 1 compliant equipment. Refer to equipment manufacturer's installation manual for instructions.
	TSO-C166b / DO-260B 1090ES equipment (ADS-B Version 2 compliant)	Two ADS-B Out systems on the same link should not be operated at the same time. Disable transmit functionality of other ADS-B equipment. Refer to equipment manufacturer's installation manual for instructions.
	TSO-C166a / DO-260A 1090ES equipment (ADS-B Version 1 compliant)	

3.7 Placards/Labels

New circuit breakers, switches, and annunciators installed for the GTX 33/330 or GTX 3X5 must be labeled. Refer to the applicable interconnect drawings in Appendix B. In order to prepare and install placards or labels:

- Put the placard or label in a location adjacent to the switch, annunciator, circuit breaker, etc.
- Make sure the placard or label is readable in all cockpit lighting conditions
  - Ambient flood lighting is satisfactory
- Make sure the placard or label is not easily erased, damaged, or obscured
- Text color should be black or white
  - Do not use amber, red, or green
- Font size should be 10 or 12 pt (minimum 0.10 inches)
- Font weight should be normal or bold with a solid color
- Font style should be regular, non-italic, and easy to read

3.8 Switches and Annunciators

The GTX 33/330 and GTX 3X5 can be connected to external switches for the usual functions. Momentary switches for TRAFFIC MUTE and IDENT are optional and should be connected as shown in the interconnection diagrams. Refer to Appendix B. Toggle switches for other functions can be attached to discrete inputs to set system parameters. Refer to Section 10 for GTX 33/330 and GTX 3X5 available discrete outputs and inputs.

3.9 Cooling

The GTX 33/330 and GTX 3X5 do not require external cooling. The GTX 3X5 transponders have a rear air inlet port that allows for the application of forced air cooling. Make sure there are no obstructions to the air inlets or fan exhaust, if used.

3.10 Transponder Antenna Considerations

This section contains guidance to ensure installed antennas meet the GTX transponder and ADS-B requirements. This STC does not install the transponder antenna. The transponder antenna(s) is considered to be existing equipment.

The existing approved transponder antenna must be verified to meet the following requirements:

- Approved to TSO-C66( ) or C74( )
- The antenna baseplate must be electrically bonded to the aircraft ground plane and achieve direct current (DC) resistance less than or equal to 2.5 mΩ

The installer must determine whether or not the aircraft's current antenna and installation meets the requirements. If an existing GTX is already installed, and the installation meets the minimum requirements, no changes to the antenna or coax are required. If the antenna does not meet the requirements, the installer is responsible for obtaining FAA approval for the installation of compliant equipment. Refer to *GTX 3X5 TSO Installation Manual* for antenna references.

3.10.1 Transponder Antenna Location

Transponder antenna location providing optimum performance must account for the following:

- The antenna should be located away from major protrusions (e.g., engine(s), propeller(s), and antenna masts)
  - It should be located as far as practical from landing gear doors, access doors, or other openings that can affect its radiation pattern
- The antenna must be attached vertically on the bottom of the aircraft
  - For diversity units, the second antenna must be attached vertically on the top of the aircraft
- The antenna must be installed at least 20 inches from any component of the FADEC (Full Authority Digital Engine Control) system
- The antenna must be installed at least 20 inches from any transponder, TAS/TCAS, DME, or other L-Band antenna.

Table 3-13 Maximum dB Loss Allowed From Transponder to Antenna

GTX 33/330	GTX 3X5
1.5 dB	2.0dB

3.10.2 Transponder Antenna Installation

NOTE

This STC is not the basis of airworthiness approval for transponder antenna installation. Refer to the antenna manufacturer's installation guidance for the particular model antenna for minimum performance specifications.

Refer to the aircraft manufacturer's data and the antenna manufacturer's installation instructions for attaching the transponder antenna. The installer can use other FAA-approved data to obtain antenna installation approval.

Table 3-14 gives examples of the recommended antenna cable vendors and the type of cable used for specific lengths of cable. Any cable that meets the minimum specifications is satisfactory for the installation.

Table 3-15 is for reference only and shows some applicable cable types. Any 50Ω, double-shielded coaxial cable assembly that meets airworthiness requirements and the permitted attenuation requirements (with connectors) can be used. When cable loss is calculated, a loss of 0.2 dB can be used for each connection.

Table 3-14 Coaxial Cable Specifications

Insertion Loss (dB/100ft) [1]	**Carlisle IT Type** [2]	**MIL-C-17 Type** [3]	**RG Type** [4]
18.5	N/A	M17/128-RG400	RG-400
11.1	N/A	M17/112-RG304	RG-304
9.2	N/A	M17/127-RG393	RG-393
15.2	3C142B	N/A	N/A
9.2	311601	N/A	N/A
7.5	311501	N/A	N/A
5.8	311201	N/A	N/A
3.8	310801	N/A	N/A

Notes:

[1] RG type coaxial cable insertion loss can change significantly between manufacturers. The insertion loss for RG type cables shown in this column is considered the worst case scenario. Refer to the cable manufacturer's specification sheet for actual attenuation (insertion loss) for the cable being used.

[2] Supplier information (for reference only):
Carlisle IT
5300 W. Franklin Drive
Franklin, WI 53132
Tel: 800-327-9473
www.carlisle.com

[3] Supplier information: Refer to current issue of Qualified Products List QPL-17.

[4] RG types are obsolete and are reference only and replaced by M17 type numbers.

Table 3-15 Typical Cable Connector Loss

Connector Type	**Approximate dB Loss**
TNC	0.08 dB
BNC	0.20 dB
C	0.15 dB

3.11 GPS Antenna Considerations (GTX 3X5 with SBAS/GPS)

The GTX 3X5 with GPS/SBAS must be connected to an approved antenna. Installation approval for the GPS antenna is not provided through this STC. The installer must use other data to gain a separate antenna installation approval. Before any modifications are started, verify the GPS/SBAS antenna can be installed on the aircraft.

Refer to Garmin's GPS/SiriusXM Antenna STC SA02018SE-D for installation of Garmin GPS antennas listed in Table 3-16. For installation of non-Garmin antennas, refer to the antenna manufacturer's installation guidance. Table 3-16 lists approved SBAS/GPS antennas that meet Garmin's minimum performance specifications.

Section 3.11.1 provides antenna location information that ensures an existing antenna location is satisfactory for use with the GTX 3X5 transponder.

Table 3-16 GTX 3X5 GPS Antennas

Model Description	Connector Type	Manufacturer	Part Number
GA 35, GPS/SBAS	TNC	Garmin	013-00235-( )
GA 36, GPS/SBAS	TNC	Garmin	013-00244-( )
GA 37, GPS/SBAS/XM	TNC	Garmin	013-00245-( )
A33W, WAAS	TNC	Garmin	013-00261-( )
GPS / VHF	TNC / BNC	Comant	CI-2580-200
GPS / VHF	TNC / BNC	Comant	CI-2728-200
GPS / XM / VHF	TNC / TNC / BNC	Comant	CI-2580-410
GPS / XM / VHF	TNC / TNC / BNC	Comant	CI-2728-410
GPS / WAAS	TNC	Comant	CI-428-200
GPS / XM	TNC / TNC	Comant	CI-428-410

3.11.1 GPS Antenna Location

NOTE

When a combination antenna is attached, the recommended distance of 2 feet or more is not applicable to the distance between the antenna elements (e.g., GPS and COM, GPS and SiriusXM). This is provided that the combination antenna is TSO authorized and has been tested to meet Garmin's minimum performance standards.

These installation guidelines meet the intent of AC 20-138B Chapter 12, Section 12-1. Meeting all of the installation guidelines is not possible on some aircraft. These guidelines are listed in order of importance to achieve optimum performance. The installer should use their best judgment to balance the installation guidelines.

GPS antennas should be installed as follows:

- As close to level as possible. If the normal flight attitude is not known, substitute with the waterline, which is typically referenced as level while a weight and balance check is done
- Mount in a location to minimize the effects of airframe shadowing during typical maneuvers. Mounting farther away from the tail section decreases signal blockage
- Mounted no closer than 2 feet from any VHF COM antenna
- Mounted no closer than 2 feet from any antennas emitting more than 25 watts of power
- Mounted no closer than 9 inches (center-to-center) from other antennas
- Maintain a constant gain pattern and limit degradation by the windscreen; avoid attaching the antenna closer than 3 inches from the windscreen
- For installations with more than one antenna, the antennas should not be attached in a straight line from the front to the rear of the fuselage. This is so that a single lightning strike does not damage all antennas

When possible, a 12-inch center-to-center spacing between GPS antennas must be used. If 12-inch spacing is not possible, the maximum center-to-center spacing possible must be used, but never less than a 9-inch center-to-center spacing.

An aircraft EMC check can show if there is a degradation of GPS in the presence of interference signals. Refer to Section 8. If an EMC check reveals unsatisfactory interference, select a different GPS antenna location or insert a GPS notch filter in line with the VHF COM or the (re-radiating) ELT transmitter that is causing interference.

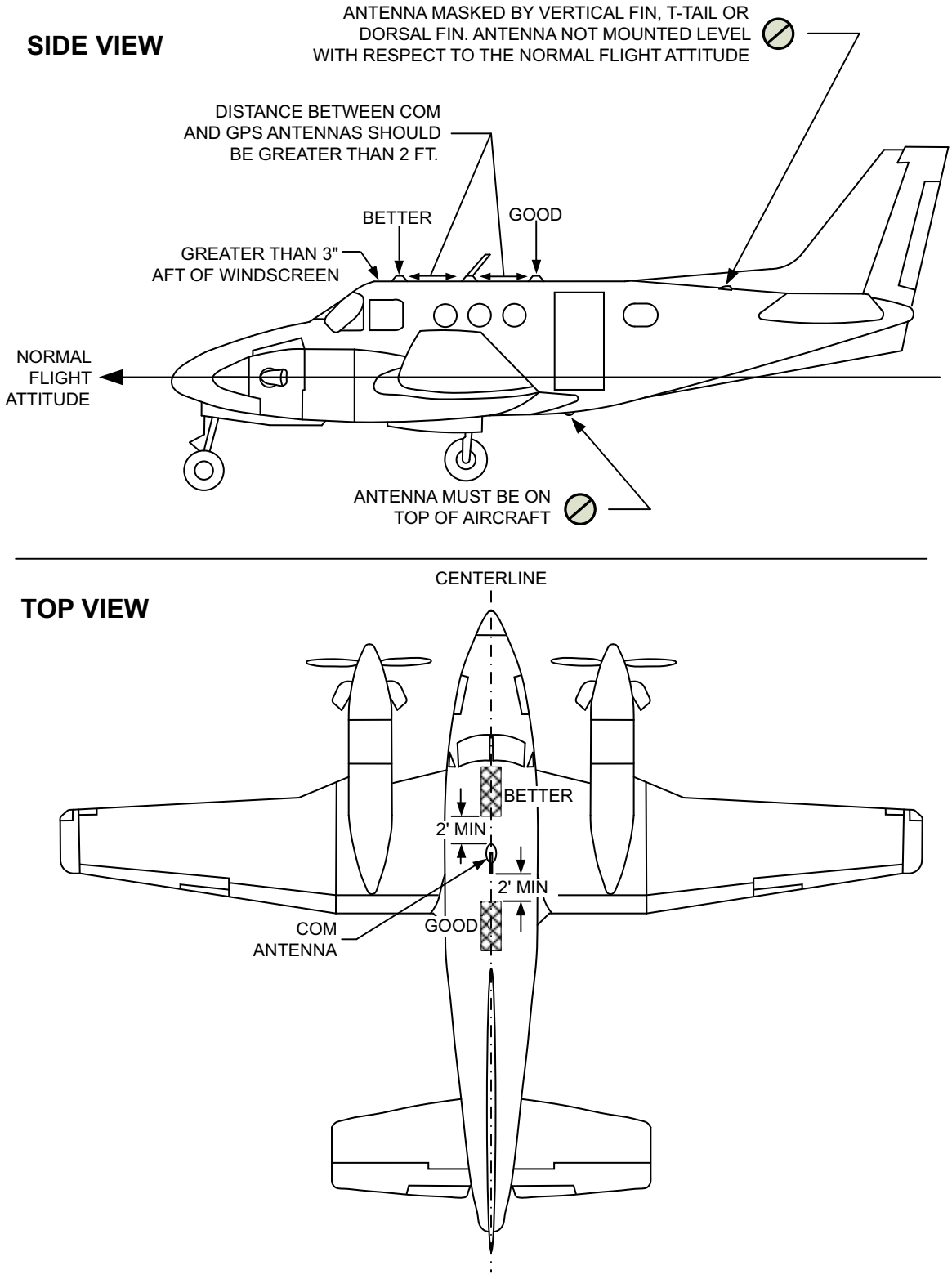

Figure 3-2 GPS Antenna Location (GTX 3X5 with SBAS/GPS)

3.11.2 GPS Coaxial Cable Requirements

This section supplies information on the GPS antenna cable requirements. The location of the GTX 3X5 unit GPS antenna compared to other COM transceivers and antennas is very important. During the post-installation checkout, susceptibility to harmonics of VHF COM transmitters is analyzed. If problems occur, better isolation or distance can be required between the GPS and COM antennas. A 1575.42 MHz notch filter can be installed in series with the antenna coaxial of the VHF COM transceiver to decrease or eliminate the harmonic interference. A notch filter for this use (P/N 330-00067-00) is available from Garmin. Refer to Section 3.4 for installation location information.

Table 3-17 GPS dB Loss Allowance

Unit	Minimum	Maximum
GTX 3X5 Internal GPS	1.5 dB	6.5 dB

To reduce or stop signal interference, the GPS antenna cable assembly loss must be in accordance with Table 3-17. Calculations should take into account the additional loss from coaxial connectors and adapters (e.g., TNC to BNC). A typical loss of 0.2 dB can be used for each connection. To keep integrity of the WAAS signal, the GPS antenna coaxial cable must have a minimum of two shields (e.g., RG-400 or RG-142B).

GPS antennas listed in Table 3-16 require a cable loss between 1.5 dB and 6.5 dB. If RG-142B or RG-400 is used, then 1.5 dB is equal to a length of approximately 6.5 feet of cable with a connector on each end.

RG-142B or RG-400 cable can be used if the length is less than 35 feet. For longer lengths, use low-loss, double- or triple-shielded, 50Ω coaxial cable.

For very short cables where the loss is less than 1.5 dB, add more cable to increase the loss to within 1.5 dB and 6.5 dB. This cable can be coiled, taking into account the minimum bend radius of the cable.

When the antenna position is selected, verify that the routing of the coaxial cable from the antenna to the GTX 3X5 Internal GPS is correct. Correct selection of coaxial cable and installation of connectors is very important to GPS signal performance.

If a VHF COM transmitter causes problems with the GPS on the selected frequencies as listed in the post-installation checkout, the problem can be because of the ELT. To find out if the ELT is a problem, disconnect the ELT antenna coaxial at the ELT unit. If the ELT is found to cause the problem, contact the ELT manufacturer.

3.12 General Installation Practices

3.12.1 Circuit Protection and Power Distribution

The circuit protection device for GTX units must be a push-pull manually resettable circuit breaker (e.g., MS26574 circuit breakers). A single circuit breaker must be used by the GTX unit. Do not try to put together more than one unit or system on the same circuit breaker, unless specifically approved by the manufacturer. The GTX should be connected to an avionics bus (i.e., non-essential bus) so power is supplied when the avionics master switch is powered on. If not reusing an existing circuit breaker location, the circuit breaker should be located where it can be reset in flight.

3.12.2 Audio Interference

Keep effects from coupled interference and ground loops to a minimum. Coupled interference can be caused in audio system cables when placed near large AC electric fields, AC voltage sources, and pulse equipment (e.g., strobes, spark plugs, magnetos, EL displays, CRTs, etc.). Interference can get into audio system cables by magnetic induction when placed near large AC current conductors or switched DC equipment (e.g., heaters, solenoids, fans, autopilot servos, etc.).

Ground loops are caused when there is more than one path where return currents flow or signal returns have the same path as large currents from other equipment. These large currents create differences in ground potential between different equipment operating in the aircraft. These differences can potentially produce an additive effect on audio panel input signals. The audio panel can receive the input signal plus an unwanted component injected by ground differentials, which is a common cause of alternator-related interference. Terminating audio shields at one end eliminates a potential ground loop injection point. The interconnect diagrams and accompanying notes in Appendix B should be followed closely to minimize interference effects.

3.13 Cable and Wiring

NOTE

If MIL-W-22759/18 wire is used, care must be taken to sufficiently support and protect the wiring because of its thinner insulation.

Wire selection should be in accordance with AC 43.13-1B Chapter 11, Sections 5 through 7. Wiring should be installed in accordance with AC 43.13-1B Chapter 11, Sections 8 through 13. Follow these guidelines to prevent damage to the aircraft and systems:

- The wire harness should not be located near flight control cables, high electrical capacity lines, or fuel/oil lines
- The wire harness should be located in a protected area of the aircraft
- Do not route the wire harness or cables near high-energy sources
- Verify the routing of wire harness does not come in contact with sources of high heat, EMI, or RF interference
- Ensure there is ample space for the wire harness and mating connectors. Avoid sharp bends
- Do a visual inspection to verify coaxial cables are connected before operating the equipment

~~3.13.1 Pressurized Aircraft~~

~~Wiring that penetrates the pressure vessel must be installed in accordance with the Type Design Data for the aircraft. Use existing provisions for any wires that penetrate the pressure bulkhead (e.g., existing bulkhead connectors or existing sealed wire through-holes). Additional holes in the pressure vessel are beyond the scope of the *GTX 33/330 and GTX 3X5 Part 23 AML STC* and require more data from the aircraft manufacturer or other FAA-approved data.~~

3.13.2 Shield Termination

Shield termination at non-Garmin equipment end must be as short as possible and must not exceed 3 inches in length unless the manufacturer's installation requirements specify differently. When there are no requirements given by the manufacturer's installation manual, the shields can be connected to the metal connector backshell when the backshell is grounded to airframe chassis ground. Alternatively, the shield termination can be directly connected to airframe chassis ground.

All shields must have continuity at any intermediate connectors used unless specified differently. Audio line shields should be continuous from end-to-end and be grounded at only one end to prevent ground loops. The interconnect diagrams, and accompanying notes in Appendix B, should be closely followed to minimize interference effects.

If wiring from the GTX goes to a unit that uses overbraided wires, then the new wiring at the unit must also be overbraided. If the wiring passes through bulkhead connectors, then each segment must be overbraided, and the overbraid must be grounded at both ends unless instructed differently in the equipment's installation manual. The overbraid must be terminated as close to the connector as possible and in accordance with the manufacturer's installation requirements.

3.14 General Electrical Bonding

NOTE

The new installation value in Table 3-18 is for installation. During service life checks, the periodic test value is used. If the maintenance check shows resistance above the periodic test value, the bonding must be improved to reach the new installation value.

Electrical equipment chassis, shield/ground terminations, antennas, supporting brackets, and racks must be electrically bonded to the aircraft's ground reference, as shown in Table 3-18. Refer to Section 5 of SAE ARP1870 when surface preparation is required to achieve electrical bond. The electrical bond must achieve direct current (DC) resistance less than or equal to the new value shown in Table 3-18 with all GTX connectors disconnected for the aircraft type and model.

For some aircraft, the instrument panel is attached with vibration mounts. For these aircraft, it must be verified that the vibration-isolated instrument panel is grounded to the airframe metallic structure with a bonding jumper the same or equivalent to the specification below. If a jumper is not installed, a bonding strap with this criteria must be installed:

- The cross-sectional area of the strap must be greater than 0.016 square inches (approx 20800 circular mils). A 7/16” or wider tubular braid (QQB575R30T437, 24120 circular mils) or a ¾” or wider flat braid (QQB575F36T781, 20,800 circular mils) must be used
- The strap length should be as short as possible and must not exceed 6 inches in length. Detailed design of a bonding strap meeting these requirements is shown in Section 3.14.2

Electrical bonding must be verified by inspection using a calibrated milliohm meter. Refer to Table 3-18. An equivalent OEM procedure can also be substituted.

Brackets installed to the main aircraft metallic structure with four or more rivets can provide sufficient electrical bond to allow equipment chassis or install rack to be bonded to the bracket.

The correct material finish is important when mating untreated or bare dissimilar metals. Materials should be galvanically-compatible. When corrosion protection is removed to ensure an electrical bond, any exposed area after the bond should be protected again.

Additional guidance is found in AC 43.13-1B and SAE ARP 1870. Refer to Figure 3-3, Figure 3-4, and Figure 3-5 for typical electrical bonding preparation examples.

Table 3-18 Ground Plane Definitions and Ground Path Resistance Requirements

Aircraft Type/Model		Ground Reference	Resistance Between GTX Chassis and Ground (mΩ)		Notes
			Periodic	New	
Metal airframe		Nearby metal structure	10.0	2.5	
Tube-and-fabric airframe		Nearby metal structure	10.0	2.5	
Composite VFR-only Models					
Aermacchi	S.211A	Instrument panel	50.0	25.0	
Diamond	DA 20-A1 DA 20-C1	Instrument panel	50.0	25.0	
	DA 40 DA 40F DA 40 NG				
GROB	G115 G115A G115B	Instrument panel	50.0	25.0	
	G115C G115C2 G115D G115D2 G115EG	Instrument panel	50.0	25.0	[2]
	G120A	Instrument panel	50.0	25.0	[2]
Ruschmeyer	R90-230RG	Instrument panel	50.0	25.0	[2]
Slingsby Aviation	T67M260	Instrument panel	50.0	25.0	[2]
Triton	A500	Instrument panel	50.0	25.0	[2]
Composite IFR Models					
Beech	390	Nearby structure lightning ground foil	10.0	5.0	
Cessna	LC40-550FG LC41-550FG LC42-550FG	Nearby aluminum lightning ground strip/bar	10.0	5.0	
Cirrus	SR20; SR22 SR22T	Local grounded structure (e.g., seat support structure, entry step)	10.0	5.0	
Costruzioni Aeronautice Tecnam	P2010	Local grounded structure	10.0	5.0	
Diamond	DA 40 DA 40 F DA 40 NG	Nearby structure lightning ground tube	10.0	5.0	[1]
	DA 42 DA 42 NG DA-62	Remote avionic box or local grounded structure	10.0	5.0	
Liberty	XL-2	Local grounded structure	10.0	5.0	
Triton	A500	Local grounded structure	10.0	5.0	

Notes:

[1] Diamond DA 40 and DA 40F with Diamond OSB 40-004/3 incorporated, or aircraft with similar factory-installed lightning protection supporting IFR operation.

[2] IFR models must use values of 10.0 and 5.0 for bonding tests and use aircraft lightning ground per the aircraft SRM or other manufacturer-approved data as ground reference instead of the instrument panel.

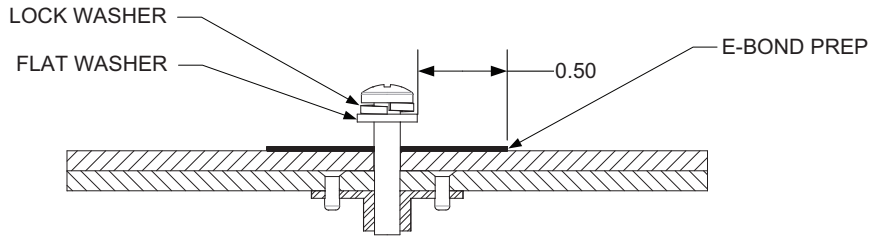

Figure 3-3 Electrical Bond Preparation - Nut Plate

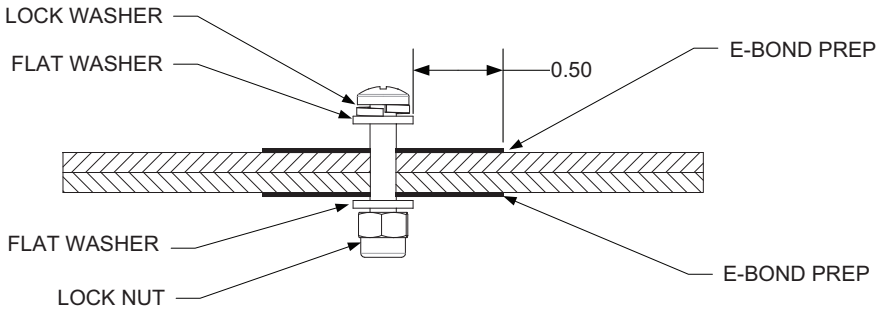

Figure 3-4 Electrical Bond Preparation - Bolt/Nut Joint

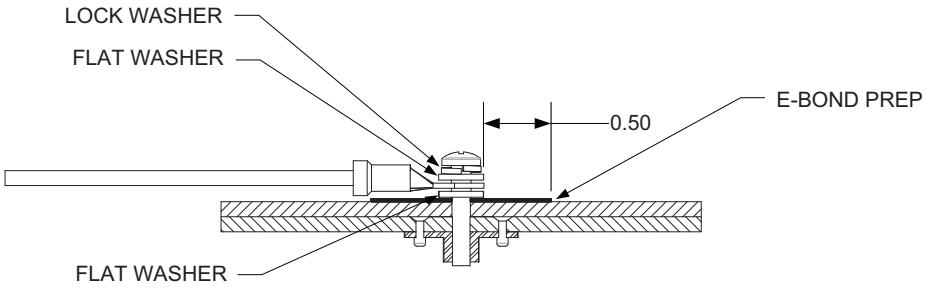

Figure 3-5 Electrical Bond Preparation - Terminal Lug

3.14.1 Aluminum Surface Preparation

This general procedure is recommended to prepare an aluminum surface for correct electrical bonding:

1. Clean grounding location with solvent.
2. Remove non-conductive films or coatings from the grounding location.
3. Apply a chemical conversion coat, such as Alodine 1200, to the bare metal.
4. When the chemical conversion coat is dry, clean the area.
5. Install bonding equipment at grounding location.
6. After the bond is complete, if any films or coatings were removed from the surface, re-apply a film or coating to the surrounding area.

Refer to SAE ARP1870 Sections 5.1 and 5.5 for a more detailed procedure.

3.14.2 Bonding Jumper

A bonding strap can be fabricated and installed to ensure the vibration-isolated instrument panel is grounded to metallic structure.

- The bonding strap length must not exceed 6 inches in length
- The bonding strap must not loop back on itself. The strap must not bend more than 45°
- Refer to Bonding Jumper Installations in AC 43.13-1B Chapter 11 for guidance on attaching the bonding strap to structure

Refer to Figure 3-6 and Table 3-19 for item numbers. Install the bonding jumper with this procedure. Assemble the bond strap by securely attaching terminal lugs (**2**) to each end of the overbraid.

1. Select a location to minimize the presence of moisture and allow for easy inspection.
2. Ensure all surface preparation material (e.g., primer, paint, etc.) is removed between the large diameter flat washer (**6**) under the terminal lug and metallic surface on the aircraft (instrument panel and aircraft metallic structure or aircraft ground).
3. After assembly and bonding check, prime the airframe structure or instrument panel in accordance with one of these:
    - The approved aircraft maintenance manual
    - MIL-PRF-85285 Type I, Color to suit (36081 Flat Gray Preferable) Coating: Polyurethane, Aircraft and Support Equipment
    - MIL-PRF-23377 Type I, Class N, Primer Coatings: Epoxy, High-Solids
4. Install the bond strap to the instrument panel and to aircraft metallic structure (or aircraft ground).

Table 3-19 Airframe Bonding Hardware

Item Number Refer to Figure 3-6	Description
1	Tinned copper flat braid, 3/4", QQB575F36T781, **or** Tinned copper tubular braid, 7/16", QQB575R30T437
2	Terminal lug, 5/16”, uninsulated, MS20659-131
3	Bolt, 5/16”, AN5-XA
4	Lock washer, 5/16”, NASM35338-45
5	Flat washer, 5/16”, NAS1149F0563P
6	Flat washer, 0.063-inch thick, NASM970-5 (AN970-5)
7	Locknut, 5/16”, AN363-524

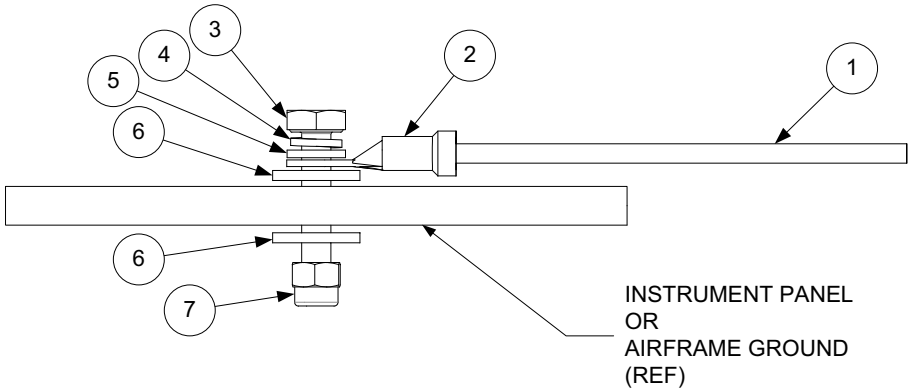

Figure 3-6 Bonding Strap

3.14.3 Transponder Antenna Bonding

NOTE

If the antenna is struck by lightning, the foil by itself may not be sufficient to dissipate lightning currents. Additional protection may be needed depending on the construction of the structure to which the antenna is attached. Refer to aircraft SRM for more information.

NOTE

For nonmetallic aircraft, the ground plane can be composed of heavy duty aluminum foil tape, such as 3M P/N 438, 3M P/N 436, or other adhesive backed dead soft foil with aluminum 7.2 mils or greater.

Obey these precautions when planning installation of the antenna:

1. The ground plane should be 12 inches minimum radius around the perimeter of the antenna. Refer to Figure 3-7. For metallic aircraft, the surrounding metal skin that the antenna is attached supplies the ground plane.
2. The antenna baseplate must be electrically bonded to the ground plane.
3. The electrical bond must achieve direct current (DC) resistance less than or equal to 2.5 mΩ.
4. The paint on the outer skin of the aircraft, under the footprint of the antenna baseplate, should not be removed unless it is necessary to meet bonding requirements.

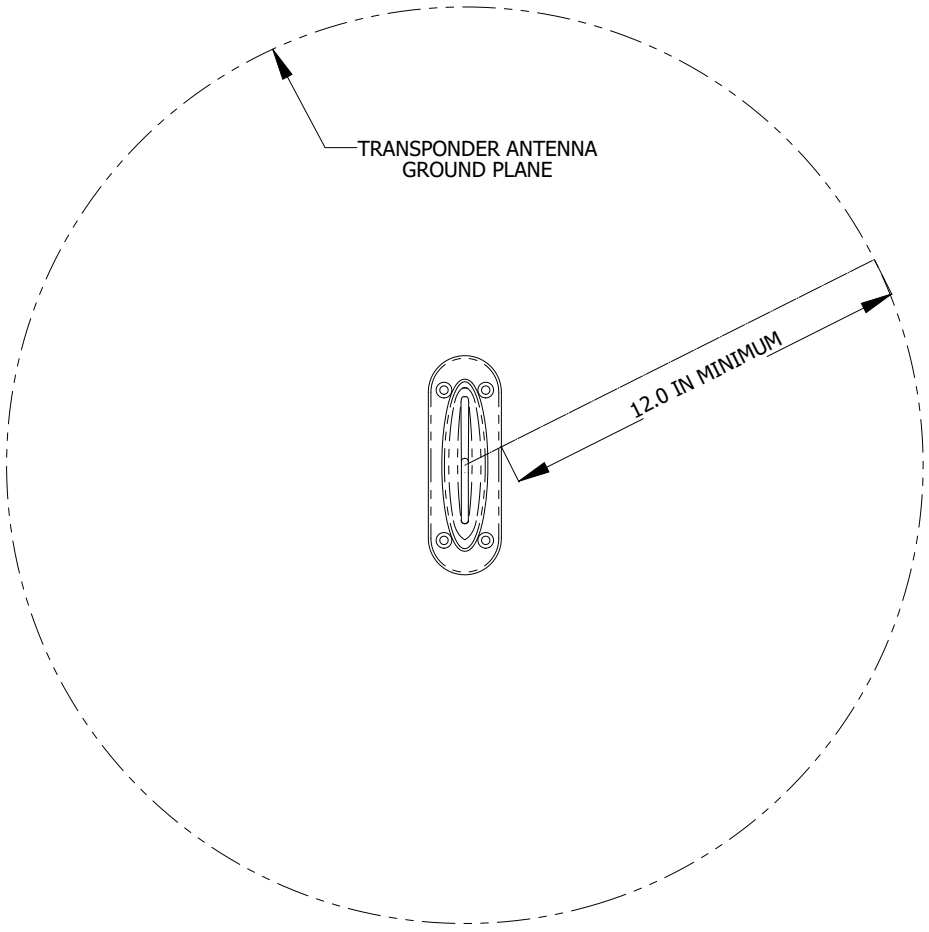

Figure 3-7 Transponder Antenna Minimum Ground Plane Radius

3.14.4 GPS Antenna Bonding

NOTE

If the antenna is struck by lightning, the foil by itself may not be sufficient to dissipate lightning currents. Additional protection may be needed depending on the construction of the structure to which the antenna is attached. Refer to aircraft SRM for more information.

NOTE

For non-metallic aircraft, the ground plane can be composed of heavy duty aluminum foil tape, such as 3M P/N 438, 3M P/N 436, or other adhesive backed dead soft foil with aluminum 7.2 mils or greater.

Obey these precautions when planning installation of the antenna:

1. The ground plane should be 7.5 inches minimum radius around the perimeter of the antenna. Refer to Figure 3-8. For metallic aircraft, the surrounding metal skin on which the antenna is attached supplies the ground plane.
2. The antenna baseplate must be electrically bonded to the ground plane.
3. The electrical bond must achieve direct current (DC) resistance less than or equal to 2.5 mΩ.
4. The paint on the outer skin of the aircraft, under the footprint of the antenna baseplate, should not be removed unless it is necessary to meet bonding requirements.

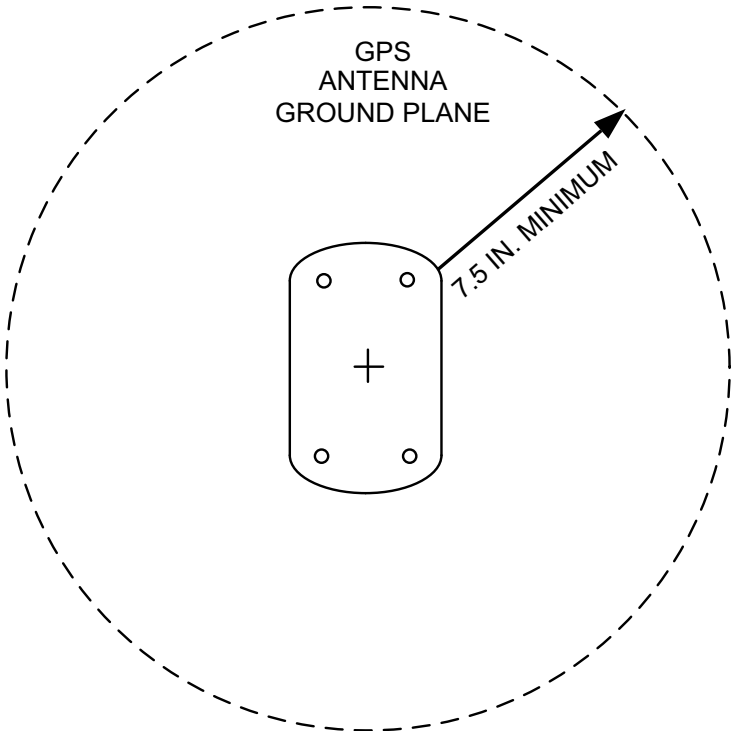

Figure 3-8 GPS/SBAS Antenna Minimum Ground Plane Radius

3.15 Electrical Load Analysis

NOTE

Circuits should be protected in accordance with the approved data in this document. Refer to the guidelines in AC 43.13-1B Chapter 11, Section 4 and to Appendix B of this manual for recommended circuit breaker ratings.

An Electrical Load Analysis (ELA) must be completed on each aircraft prior to installation to verify the aircraft electrical system is capable of supporting the GTX. The purpose of the ELA is to show compliance with 14 CFR 23.1351. As part of the installation, it must be shown that the maximum electrical system demand does not exceed 80% of the alternator data plate rating. Satisfactory completion of the ELA should be recorded on FAA Form 337. For Commuter Category aircraft, an Electrical Load Analysis that accounts for the electrical loads applied to the electrical system in typical combinations and for probable durations is required. There are several approaches that can be taken, as given in this section. For each approach, use the GTX 33/330 or GTX 3X5 current draw values listed in Table 1-6.

3.15.1 Aircraft without Existing Electrical Load Analysis

Prior to undertaking a complete ELA, the net change to the electrical load resulting from the GTX installation should be found. The results of this analysis determines how to proceed. If there is a net decrease in electrical load as a result of the installation of the GTX (i.e., removal of existing equipment), no more Electrical Load Analysis is required. If there is a net increase in electrical load as a result of the installation of the GTX, proceed to Section 3.15.3.

3.15.2 Electrical Load is Decreased After Modification

In instances when older systems are replaced with newer equipment, the electrical load presented to the power system may be decreased. If the overall load on the electrical system is decreased as a result of the GTX installation, no more analysis is required. This assumes that the electrical system was within all limits prior to the GTX installation. The amended electrical load calculation should be added to the aircraft permanent records to document the electrical load reduction.

3.15.3 Electrical Load is Increased After Modification

If it is found that the electrical load has increased, then a complete Electrical Load Analysis must be done to show that the capacity of the alternator/generator is sufficient for the electrical load. For guidance on preparing an ELA, refer to ASTM F 2490-05, *Standard Guide for Aircraft Electrical Load and Power Source Capacity Analysis*. Alternatively, the loads under different operating conditions can be measured. Refer to Section 3.15.4 for more information.

3.15.4 Performing an Electrical Load Analysis by Measurement

This section describes how to do an ELA for a single alternator/single battery electrical system. This should be modified accordingly for aircraft with multiple batteries or alternators. For Commuter Category aircraft, the Electrical Load Analysis cannot be conducted by measurement. Refer to Section 3.15.3 for details. It must be shown that the maximum electrical demand for each alternator does not exceed 80% of the alternator data plate rating.

Section Definitions

- **Normal operation**: the primary electrical power generating system is operating normally
- **Emergency operation**: the primary electrical power generating system is inoperative

If the installation of the GTX increases the overall load, an Electrical Load Analysis must be done. Because of the age of some equipment, there is not always sufficient information about the current draw of this equipment. One permitted method of doing an Electrical Load Analysis is to determine the electrical loads by measurement. The measurements must account for loads applied to the electrical system in probable combinations and durations for aircraft operation.

An in-circuit or clamp-on, calibrated ammeter with 0.5 A or better precision can be used for current measurement. Record the continuous (data plate/nameplate) rate for the alternator and battery.

CAUTION

Do not use an ammeter that is not capable of measuring the anticipated current. Using an ammeter that is not capable may result in damage to the equipment.

WARNING

Do not operate the pitot heat any longer than necessary to measure the current. The pitot tube can get hot enough to burn flesh or cause damage to the equipment.

1. Use the blank electrical load tabulation form provided in Figure 3-10 to compile a list of electrical loads on the aircraft (generally, this is a list of circuit breakers and circuit breaker switches). Refer to the example in Figure 3-11.
2. Identify whether each load is continuous (e.g., GPS) or intermittent (e.g., stall warning horn, landing gear).
3. Use the worst-case flight condition to identify whether each load is used in a particular phase of flight for normal operation. If some loads are mutually exclusive and not powered on simultaneously (e.g., pitot heat and air conditioning), use only those loads for the worst case condition.
4. Identify whether each load is used in a particular phase of flight for emergency operation. As a minimum these systems include:
    - COM radio #1
    - NAV radio #1
    - Transponder and associated altitude source
    - Audio panel
    - Stall warning system (if applicable)
    - Pitot heat
    - Landing light (switched on during landing only)
    - Instrument panel dimming

5. Connect the calibrated ammeter in line between the external power source and the master relay circuit, as shown in Figure 3-9. This will eliminate errors because of the charging current drawn by the battery.

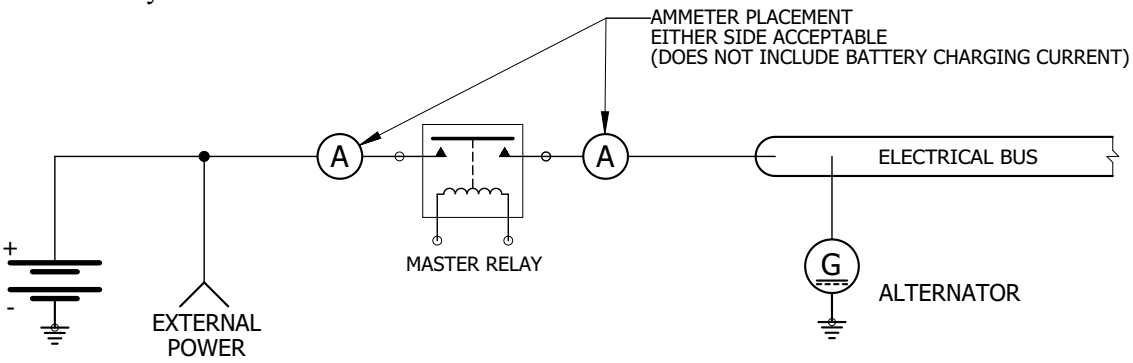

Figure 3-9 Ammeter Placement for Current Measurements

6. Make sure all circuit breakers are closed.
7. Apply external power to the aircraft. Power source voltage should be set to nominal alternator voltage (usually 13.8 VDC or 27.5 VDC).
8. Turn on the battery master switch.
    a) Intermittent electrical loads are not measured. It is assumed that if more current is required beyond what the alternator can supply, this short-duration demand is supplied by the battery.
9. Set the lighting as given below. These settings will be used for every current measurement that follows:
    a) All instrument panel and flood lights should be set to maximum brightness.
    b) Any other displays with a backlight should be set to 50% brightness.
10. Use the tabulation completed above and switch on all continuous electrical loads used in the taxiing phase. Record ammeter current reading (measurement (a) in Figure 3-10). Obey these precautions for this measurement:
    a) The autopilot circuit breaker should be closed.
    b) The autopilot should not be engaged.
11. Use the tabulation completed above and switch on all continuous electrical loads used in the normal takeoff/landing phase. Record ammeter current reading. Measurements must be taken with the landing lights ON and OFF (measurements (b1) and (b2) in Figure 3-10). Obey these precautions for this measurement:
    a) The autopilot circuit breaker should be closed, and the autopilot should be engaged.
    b) Use the tabulation completed above and switch on all continuous electrical loads used in the normal cruise phase. Record the ammeter current reading (measurement (c) in Figure 3-10).
12. Use the tabulation completed above and switch on all continuous electrical loads used in the emergency cruise phase. Record the ammeter current reading. Record the current drawn with the landing light switched OFF and again with the landing light switched ON.
13. Use the tabulation completed above and switch on all continuous electrical loads that are used for the emergency landing phase. Record the ammeter current reading.

14. Use the values measured and recorded. Complete the ELA using the blank electrical load tabulation form in Figure 3-10. Make sure the maximum demand does not exceed 80% of the alternator data plate rating.

Electrical Load Tabulation

When the pitot heat and landing light are switched on simultaneously, it is permissible for electrical load to exceed 80% of the alternator data plate rating during the takeoff/landing phase of flight.

Electrical load should:

- Not exceed 95% of the alternator data plate rating
- Not exceed 80% of the alternator data plate rating with the pitot heat on and the landing light off

ELECTRICAL LOAD TABULATION FORM

Date: _____ **Tail Number:** _____

Circuit/System	Circuit Breaker Number	Operating Time	Phase(s) of flight during which circuit/system is used				
			Normal Operation			Emergency Operation	
			Taxiing 10 min	TO/Land 10 min	Cruise 60 min	Cruise (*Calculated*)	Land 10 min
			☐	☐	☐	☐	☐
			☐	☐	☐	☐	☐
			☐	☐	☐	☐	☐
			☐	☐	☐	☐	☐
			☐	☐	☐	☐	☐
			☐	☐	☐	☐	☐
			☐	☐	☐	☐	☐
			☐	☐	☐	☐	☐
			☐	☐	☐	☐	☐
			☐	☐	☐	☐	☐
			☐	☐	☐	☐	☐
			☐	☐	☐	☐	☐
			☐	☐	☐	☐	☐
			☐	☐	☐	☐	☐
			☐	☐	☐	☐	☐
			☐	☐	☐	☐	☐
			☐	☐	☐	☐	☐
			☐	☐	☐	☐	☐
			☐	☐	☐	☐	☐
			☐	☐	☐	☐	☐
			☐	☐	☐	☐	☐
			☐	☐	☐	☐	☐
			☐	☐	☐	☐	☐
			☐	☐	☐	☐	☐
			☐	☐	☐	☐	☐
			☐	☐	☐	☐	☐
			☐	☐	☐	☐	☐
			☐	☐	☐	☐	☐
			☐	☐	☐	☐	☐
			☐	☐	☐	☐	☐
			☐	☐	☐	☐	☐
			☐	☐	☐	☐	☐
			☐	☐	☐	☐	☐
			☐	☐	☐	☐	☐
			☐	☐	☐	☐	☐
			☐	☐	☐	☐	☐
			☐	☐	☐	☐	☐
			☐	☐	☐	☐	☐
			☐	☐	☐	☐	☐
			☐	☐	☐	☐	☐
			☐	☐	☐	☐	☐
			☐	☐	☐	☐	☐
			☐	☐	☐	☐	☐

Figure 3-10 GTX Electrical Load Tabulation Form
Sheet 1 of 2

ELECTRICAL LOAD TABULATION FORM (CONTINUED)

Date: _____ **Tail Number:** _____

Circuit/System	Circuit Breaker Number	Operating Time	Phase(s) of flight during which circuit/system is used: Normal Operation – Taxiing 10 min	Normal Operation – TO/Land 10 min	Normal Operation – Cruise 60 min	Emergency Operation – Cruise (*Calculated*)	Emergency Operation – Land 10 min
_____	_____	_____	☐	☐	☐	☐	☐
_____	_____	_____	☐	☐	☐	☐	☐
_____	_____	_____	☐	☐	☐	☐	☐
_____	_____	_____	☐	☐	☐	☐	☐
_____	_____	_____	☐	☐	☐	☐	☐
_____	_____	_____	☐	☐	☐	☐	☐
_____	_____	_____	☐	☐	☐	☐	☐
_____	_____	_____	☐	☐	☐	☐	☐
_____	_____	_____	☐	☐	☐	☐	☐
Total current used (amps):			_____ (a)	_____ Ldg Lt ON (b1) _____ Ldg Lt OFF (b2)	_____ (c)	_____ (d)	_____ (e)
÷ Alternator rating (amps):			____				
x 100% = Percent of alternator capacity used:			_____ % (< 80%)	_____ % Ldg Lt ON (< 95%) _____ % Ldg Lt OFF (< 80%)	_____ % (< 80%)	**N/A**	**N/A**
		Pass/Fail:	_____	_____	_____		

Notes:

Figure 3-10 GTX Electrical Load Tabulation Form
Sheet 2 of 2

ELECTRICAL LOAD TABULATION FORM

Date: _____ **Tail Number:** NXMPL1

Circuit/System	Circuit Breaker Number	Operating Time	Phase(s) of flight during which circuit/system is used				
			Normal Operation			Emergency Operation	
			Taxiing 10 min	TO/Land 10 min	Cruise 60 min	Cruise (*Calculated*)	Land 10 min
Alternator Field	A1	Continuous	☒	☒	☒	☐	☐
Annunciator Panel	C1	Continuous	☒	☒	☒	☒	☒
Vacuum Warning	C2	Intermittent	☐	☐	☐	☐	☐
Stall Warning	C3	Intermittent	☐	☐	☐	☐	☐
Gear Warning	C4	Intermittent	☐	☐	☐	☐	☐
Gear Actuator	C5	Intermittent	☐	☐	☐	☐	☐
Cluster Gauge	D1	Continuous	☒	☒	☒	☒	☒
Ignition	D2	Intermittent	☐	☐	☐	☐	☐
PFD	D3	Continuous	☒	☒	☒	☒	☒
Turn Coordinator	D4	Continuous	☒	☒	☒	☐	☐
Gear Relay	D5	Intermittent	☐	☐	☐	☐	☐
ADC	E1	Continuous	☒	☒	☒	☒	☒
Panel Lights	E2	Continuous	☒	☒	☒	☒	☒
Glareshield Lights	E3	Continuous	☒	☒	☒	☒	☒
AHRS	E4	Continuous	☒	☒	☒	☒	☒
Flap Actuator	E5	Intermittent	☐	☐	☐	☐	☐
COM 1	F1	Continuous	☒	☒	☒	☒	☒
GPS/NAV 1	F2	Continuous	☒	☒	☒	☒	☒
COM 2	F3	Continuous	☒	☒	☒	☐	☐
GPS/NAV 2	F4	Continuous	☒	☒	☒	☐	☐
Autopilot	F5	Continuous [1]	☒	☒	☒	☐	☐
Audio Panel	G1	Conts.	☒	☒	☒	☒	☒
Radio Blower	G2	Continuous	☒	☒	☒	☐	☐
ADF	G3	Continuous	☒	☒	☒	☐	☐
Transponder	G4	Continuous	☒	☒	☒	☒	☒
GDL 69	H1	Continuous	☒	☒	☒	☐	☐
TCAD	H2	Continuous	☒	☒	☒	☐	☐
JPI Engine Monitor	H3	Continuous	☒	☒	☒	☒	☒
Bose Headsets	H5	Continuous	☒	☒	☒	☒	☒
Altitude Encoder	J1	Continuous	☒	☒	☒	☒	☒
Strobe Light	SW1	Continuous	☒	☒	☒	☒	☒
Navigation Lights	SW2	Continuous	☒	☒	☒	☒	☒
Recognition Lights	SW3	Continuous	×	☒	☒	☒	☒
Landing Light	SW4	Continuous	☒	☒	☐	☐	☐
Pitot Heat	SW5	Continuous	☐	☒	☒	☒	☒

Figure 3-11 GTX Electrical Load Tabulation Form (Sample)
Sheet 1 of 2

ELECTRICAL LOAD TABULATION FORM (CONTINUED)

Date: _____ **Tail Number:** NXMPL1

Circuit/System	Circuit Breaker Number	Operating Time	Phase(s) of flight during which circuit/system is used: Normal Operation – Taxiing 10 min	Normal Operation – TO/Land 10 min	Normal Operation – Cruise 60 min	Emergency Operation – Cruise (*Calculated*)	Emergency Operation – Land 10 min
Elevator Trim	SW6	Intermittent	☐	☐	☐	☐	☐
Boost Pump	SW7	Intermittent	☐	☐	☐	☐	☐
			☐	☐	☐	☐	☐
			☐	☐	☐	☐	☐
			☐	☐	☐	☐	☐
			☐	☐	☐	☐	☐
			☐	☐	☐	☐	☐
			☐	☐	☐	☐	☐
			☐	☐	☐	☐	☐
Total current used (amps):			47.5 (a)	60.0 Ldg Lt ON (b1) 44.7 Ldg Lt OFF (b2)	43.5 (c)	34.0 (d)	48.1 (e)
÷ Alternator rating (amps): 68							
x 100% = Percent of alternator capacity used:			68 % (< 80%)	86 % Ldg Lt ON (< 95%) 64 % Ldg Lt OFF (< 80%)	62 % (< 80%)	N/A	N/A
Pass/Fail:			Pass	Pass	Pass		

Notes:

[1] During taxi phase, the Autopilot circuit breaker is closed but the autopilot is not engaged.

Figure 3-11 GTX Electrical Load Tabulation Form (Sample)
Sheet 2 of 2

3.15.5 Battery Capacity Analysis

If it is determined that the modification results in an increase in electrical load, then it must be further verified that the aircraft electrical system remains in compliance, which includes both electrical generation capacity, and if loads have been increased, that reserve battery capacity remains adequate to support loads essential to continued safe flight and landing. If the existing battery does not meet the battery capacity requirements, a battery that has sufficient capacity must be installed.

Refer to ASTM document F 2490 - 05, *Standard Guide for Aircraft Electrical Load and Power Source Capacity Analysis*, for more information.

1. Examine the nameplate capacity of the battery and assume 75% is available.
   For example, 12A-h = 720A-min, therefore 720 A-min X 75% = 540 A-min.
2. Estimate the normal or pre-load shed cruise condition (assume worst case cruise at night).
   For example, 15 A X 5 min = 75 A-min. This assumes 5 minutes for the pilot to shed non-essential loads. Any automatic load shedding can be assumed to be immediate and need not be considered in the pre-load shed calculations.
3. Determine the minimum cruise load necessary to maintain flight after the generator/alternator has failed. For example, 10 A.
4. Determine the consumption required during the landing approach.
   For example, 20 A for 5 min = 100 A-min. The cruise duration is therefore:

$$\frac{\text{Battery Capacity} - (\text{Pre-loadshed} + \text{Landing Load})}{\text{Cruise Load}} = \frac{(a) - ((b) + (d))}{(c)}$$

$$= \frac{540\ \text{A-min} - (75\ \text{A-min} + 100\ \text{A-min})}{10\ \text{A}}$$

$$= \frac{365\ \text{A-min}}{10\ \text{A}}$$

$$= 36.5\ \text{min}$$

Figure 3-12 Battery Capacity Analysis Example

4 MATERIALS

4.1 Garmin Available Installation Materials....4-2
4.2 Installation Materials Not Supplied....4-3
4.3 Crimping Tools....4-4
4.4 Test Equipment....4-4

4.1 Garmin Available Installation Materials

Refer to Table 4-1 through Table 4-4 for a list of standard kit items available from Garmin.

Table 4-1 GTX 33/330 and GTX 3X5 Connector Kit Options

Unit	Item	P/N
GTX 33/33D	Connector kit	011-01012-01
GTX 330/330D	Connector kit	011-00583-00
GTX 335/335R	Connector kit	011-02977-00
GTX 345/345R	Connector kit	011-02977-01

Table 4-2 GTX 33/330 and GTX 3X5 Backplate Assembly Options

Unit	Item	P/N
GTX 33	Backplate assembly	011-00582-00
GTX 33D	Backplate assembly	011-00582-01
GTX 330	Backplate assembly	011-00582-00
GTX 330D	Backplate assembly	011-00582-01
GTX 3X5 standard or G1000 mount with GPS	Backplate assembly	011-02976-01
GTX 3X5 standard or G1000 mount without GPS	Backplate assembly	011-02976-00
GTX 3X5 vertical mount without GPS	Backplate assembly	011-02976-10
GTX 3X5 vertical mount with GPS	Backplate assembly	011-02976-11
GTX 3X5 vertical mount with TNC XPDR	Backplate assembly	011-02976-12
GTX 3X5D, standard or G1000 mount	Backplate assembly	011-04340-00
GTX 3X5D, TNC	Backplate assembly	011-04340-01
GTX 345DR, standard or G1000 mount	Backplate assembly	011-04340-02
GTX 3X5DR, standard or G1000 mount, TNC	Backplate assembly	011-04340-03
GTX 3X5D, vertical mount	Backplate assembly	011-04340-10
GTX 3X5D, vertical mount, TNC	Backplate assembly	011-04340-11

Table 4-3 GTX 33/330 and GTX 3X5 Mount Rack Options

Unit	Item	P/N
GTX 33/33D	Install rack	115-00629-00
GTX 330/330D	Install rack	115-00294-00
GTX 3X5 standard mount	Install rack	115-01771-01
GTX 3X5 G1000 mount	Install rack	115-02250-00
GTX 3X5 vertical mount	Install rack	011-03762-00

Table 4-4 GTX 3X5 Configuration Module

Unit	Item	P/N
GTX 3X5	Configuration module	011-00979-03
GTX 3X5	Garmin altitude encoder with configuration module	011-03080-00

4.2 Installation Materials Not Supplied

NOTE

The GTX series models are used with standard aviation accessories. Refer to AC 43.13-1B Chapter 11, Sections 5 through 7 for wire selection and sizing information.

Some of these items may be necessary for installation, but are not supplied:

- MIL-W-22759/16 or MIL-W-22759/18 electrical wire
- MIL-C-27500 shielded cable with M22759/16 or M22759/18 wire (TG) or ETFE jacket (14)
- 2024-T3 aluminum per AMS-QQ-A-250/5, or 6061-T6 aluminum per AMS 4025, AMS 4027, or AMS-QQ-A-250/11, varying thickness
- Coaxial cable (refer to Table 3-14 and Table 3-15 for specifications)
- Aircraft grade category 5 Ethernet cable for installations that use HSDB interfaces (refer to Table 4-5 for more information)

Table 4-5 Permitted Installation Ethernet Cable P/Ns

Manufacturer	Part Number
Carlisle IT	392404 (24 AWG)
PIC Wire and Cable	E10424 (24 AWG)
Thermax	MX100Q-24 (24 AWG)

- Standard fasteners
- MS26574 or MS22073 push-pull manually resettable circuit breakers, or other trip-free, push-pull circuit breaker type as specified in the aircraft parts catalog
- Wire bundle routing, securing, and management supplies, as required
- MS25036 or MS20659 ring terminals
- M83519/2-X shield terminators
- A-A-59163 (MIL-I-46852C) silicone fusion tape
- Adhesive-backed dead soft aluminum foil tape, minimum 7. 2 mils metal thickness (e.g., 3M P/N 436, 438)
- Epoxy primer (MIL-P-23377 Class N)
- ~~USB A-to-B cable (for interface between a laptop computer and the GTX 3X5)~~

4.3 Crimping Tools

Connectors used for the GTX series transponders use crimp contacts. The recommended contact crimping tools for the D-Sub connectors are shown in Table 4-6.

NOTE

GTX 330 transponders use a card edge connector to ground shields. Use AMP P/N 90272-1 crimper for card edge contact pins.

Table 4-6 Recommended Crimping Tools

Manufacturer	Hand Crimping Tool	High Density 22-28 AWG	
		Positioner	Insertion/ Extraction Tool
Military Spec.	M22520/2-01	M22520/2-09	M81969/14-01 M81969/1-04
Positronic	9507-0-0-0	9502-4-0-0	4811-2-0-0
AMP	601966-1	601966-6	91067-1
Daniels	AFM8	K42	M81969/1-04
Astro	615717	615725	M81969/1-04

4.4 Test Equipment

This test equipment is required for the installation:

- Ramp tester with traffic (e.g., IFR 6000 or equivalent for system performance and checkout)
- Pitot/static test set for system performance and checkout for altitude reporting verification
- To measure the electrical bonding between system components and aircraft ground, a milliohm meter with a precision of ±0.1 mΩ or better is required
- An ammeter with a precision of ±0.5 amps and a current capacity sufficient for the total aircraft load for the ELA

5 INSTALLATION

5.1 General Installation Requirements....5-2
5.1.1 Composite Aircraft....5-6
5.2 Remote Mount....5-9
5.2.1 GTX 33/33D and GTX 3X5R Installations....5-11
5.2.2 G950/G1000 Installation....5-11
5.2.3 Discrete Annunciator Installation and Removal....5-20
5.3 General Electrical Installation....5-21
5.3.1 Wiring (Addition/Change)....5-21
5.3.2 Special Tools Required....5-21
5.3.3 Power Distribution....5-21
5.3.4 Wire and Cable Considerations....5-21
5.3.5 Coaxial Cable Preparation....5-21
5.3.6 Wire Harness Construction....5-21
5.3.7 Shielded Cable Preparation....5-22
5.3.8 Cable Bundle Termination on Backshell Assembly....5-24
5.4 Connector and Backplate Assembly....5-25
5.4.1 Connector and Backplate Assembly for GTX 330/330D....5-25
5.4.2 Connector and Backplate Assembly for GTX 33/33D....5-27
5.4.3 Connector and Backplate Assembly for GTX 3X5....5-29
5.5 GAE and Configuration Module Installation....5-35
5.5.1 Configuration Module Installation....5-35
5.5.2 GAE....5-36
5.5.3 GAE Installation....5-36
5.6 GTX Installation....5-38
5.6.1 GTX 330/330D Installation....5-38
5.6.2 GTX 33/33D Installation....5-38
5.6.3 GTX 335/345 Installation....5-38
5.6.4 GTX 3X5R with Standard Remote or G1000 System Rack Mount....5-39
5.6.5 GTX 3X5R with Vertical Remote Rack Mount....5-39

5.1 General Installation Requirements

The general requirements in this section apply to the GTX 33/330 and GTX 3X5 transponder installation. For more drawings, refer to Appendix A.

If the GTX 345 Bluetooth is enabled (i.e., PED connected), the GTX 345 must be installed such that one side of the unit is within ±30° of the aircraft centerline in order to calibrate the internal sensor. For more information, refer to Figure 7-16.

Installation of GTX 33X and GTX 3X5 transponders requires:

1. The existing aircraft support structure used for installation of equipment (i.e., brackets or rails for mounting the unit in the instrument panel) must be minimum 0.032 inches thick. Fastener holes added to existing brackets must maintain a minimum of 2d edge distance (d is fastener diameter) from the bracket edges and 3d edge distance from existing holes. If added holes do not meet this criteria, new bracket(s) need to be procured from the aircraft manufacturer or fabricated in accordance with the model-specific standard practices manual or structural repair manual, if allowed. Alternatively, the replacement bracket(s) shall:
   a. Use the same material and have the same thickness as the existing bracket(s). If the material used in the construction of the existing bracket is not known, 2024-T3 aluminum per AMS-QQ-A-250/5 can be used.
   b. If corrosion protection methods are not specified by the model-specific aircraft standard practices manual, the bracket(s) must be conversion coated per MIL-DTL-5541 Type II or MILDTL-81706 Type II and primed with high-solids chemical and solvent resistant epoxy primer per MIL-PRF-23377, Class N.
2. The GTX 33X/GTX 3X5 transponder unit rack is installed with six (6) 0.138-32 UNC flat head screws, four (4) at the front and two (2) at the back of the rack. The back end of the rack must be supported, as prescribed by Advisory Circular AC 43.13-2B Chapter 2, *Communication, Navigation, And Emergency Locator Transmitter System Installations*. Screws must be tightened and properly seated in the rack so the unit can slide in and out of the rack unobstructed. Deformation of the unit mounting rack (when installed) should be avoided, as it can make transponder installation and removal difficult.
3. Panel-mounted GTX 33X/3X5 installations require that there be available space for the transponder, connectors, and wiring harness. It should be considered that:
   a. GTX 330/330D requires at least 14.25 inches of depth.
   b. GTX 335/345 requires at least 13.10 inches of depth.

NOTE

For GTX 3X5 only: *make sure straps or other means of support do not obstruct the vent on the side of the unit (refer to Figure A-11) if forced air cooling is desired.*

4. Area around the fastener holes on the side of the rail that attaches to the GTX 330/330D mounting rack must be cleaned and prepared for electrical bond, per Section 3.14 of this manual.
5. Maintain a minimum of 3 inches between the edge of the mounting rack nearest the connector and any nearby objects to provide clearance for the connectors, wire harness, and antenna cables.
6. For metal aircraft, the unit must be electrically bonded to the aircraft metallic structure. Refer to Section 3.14 and Table 3-18.
7. For nonmetallic aircraft, the unit must be electrically bonded to the aircraft ground plane. Refer to Section 3.14 and Table 3-18.

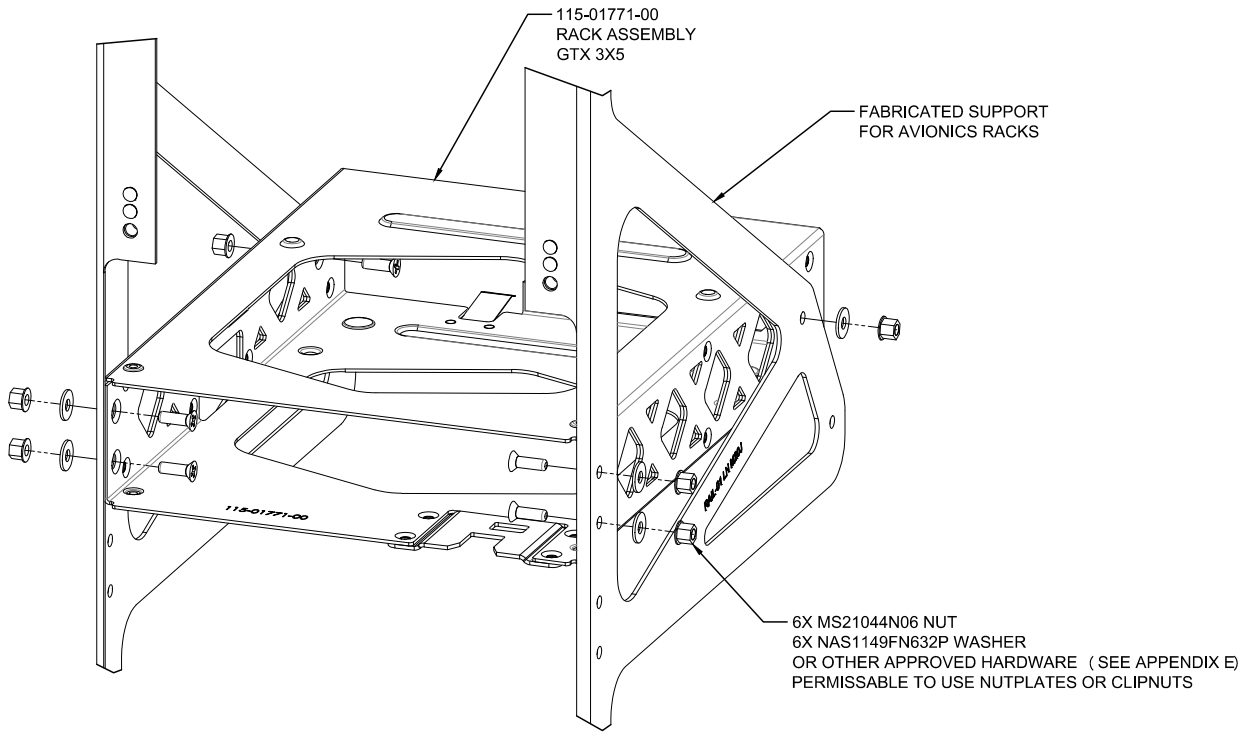

Figure 5-1 Typical GTX Rack Installation Example

Avionics Stack Cutout

Some instrument panels may have to be modified to increase the size of existing opening to accommodate installation of the GTX 33X/3X5. If the existing panel cutout must be enlarged:

1. The cutout geometry must meet dimensional requirements defined in Figure 5-2.
2. The cutout must not extend into aircraft structure supporting instrument panel installation (primary structure) nor affect any sub-panel structure.
3. Cutout corners are rounded and edges must be clean and protected from corrosion with appropriate finish.

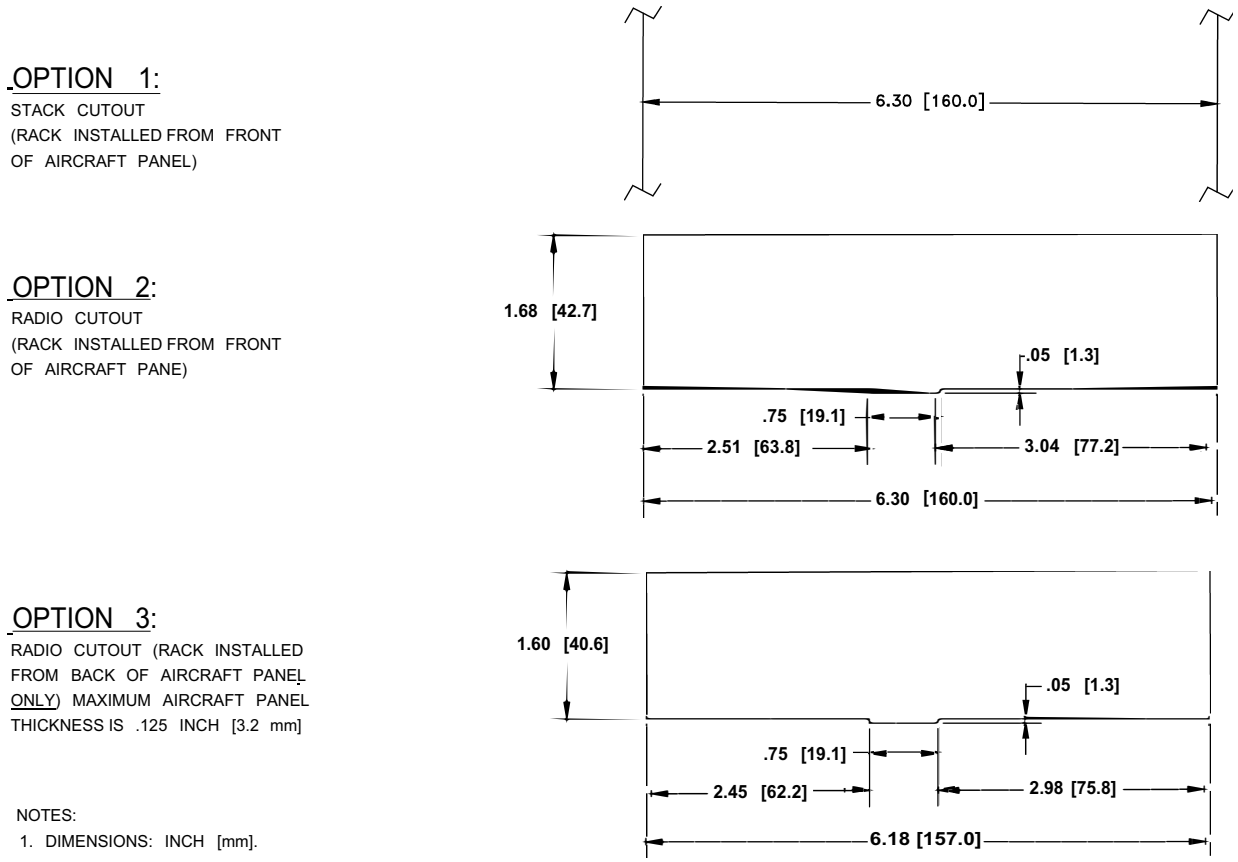

Figure 5-2 Panel Cutout Detail for GTX 330/330D and GTX 3X5

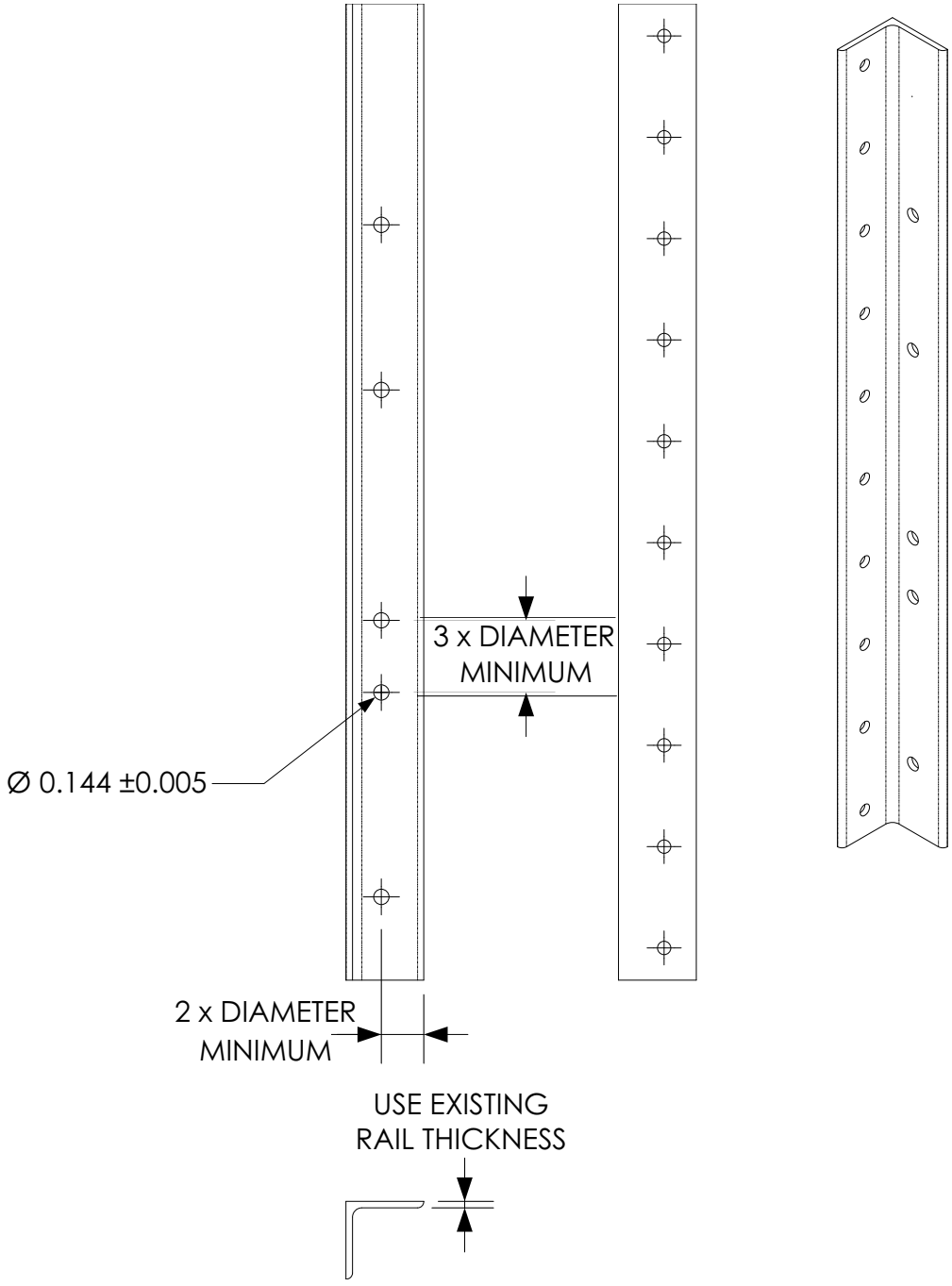

Figure 5-3 Avionics Rack Mounting Rail Example

5.1.1 Composite Aircraft

For composite airframes, unless otherwise provisioned for by the aircraft structural repair manual or standard practices manual, remote-mounted GTX 33X/3X5 transponders must be installed on an existing shelf designated by the aircraft manufacturer for equipment installation.

For aircraft with composite airframes, the GTX 33X/3X5 must be electrically bonded to the metallic instrument panel. Refer to Table 3-18 for ground path requirements. This can be accomplished using metallic structure, manufacturer provided lightning ground, or by providing electrical path with heavy-duty dead soft aluminum tape, such as 3M Heavy Duty Aluminum Foil Tape 436, 438, or other adhesive-backed dead soft aluminum foil with minimum 7.2 mils metal thickness.

Proper location and electrical bonding of the GTX 33X/3X5 installed on equipment shelf made from nonmetallic/non-conductive materials requires:

1. Identification of a path between the transponder location and the instrument panel ground that will accommodate a strip of aluminum tape at least 4 inches wide. The tape must extend from the unit mount to the grounding location for the instrument panel and maintain 7:1 length-to-width ratio. If required, multiple tape strips can be overlapped to maintain the 7:1 length-to-width ratio. Tape ends must, in this case, fold over twice and be overlapped with a 3-inch wide tape strip over the seam, as illustrated in Figure 5-4. Tears in the tape or tape joint degrade the bonding performance and must be avoided.

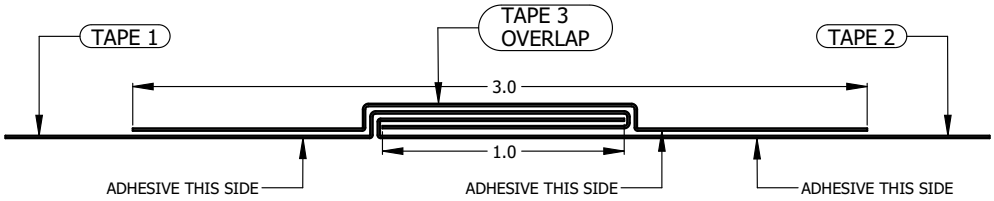

Figure 5-4 Aluminum Tape Joint

2. The ground must be a bare metal surface on the instrument panel or grounding structure for the instrument panel. Any new (or existing) ground stud must be prepared for electrical bonding.
3. If it is impractical to reach a ground with aluminum tape, then the bond strap must be used. The bond strap must be minimum 5/8 inches wide and no longer than 6 inches. Bond strap fasteners are shown in Figure 3-6. Additionally:
   a. The aluminum tape must have a 5:1 length-to-width ratio.
   b. Tape end must fold over itself minimum twice and be clamped to the shelf with a strip of 0.063-inch thick aluminum.
4. The resistance between tape and the local grounding location must be verified and not exceed 2.5 mΩ. Practices defined in SAE ARP1870 Section 5.1, *Aluminum Surface Preparation*, and Section 5.5, *Refinishing*, should be followed when preparing the electrical bond for aluminum to aluminum interfaces.
5. If the aluminum tape will come into contact with carbon composite material, the tape must be electrically isolated from the carbon composite material to prevent corrosion because of dissimilar materials. Refer to Figure 5-5.

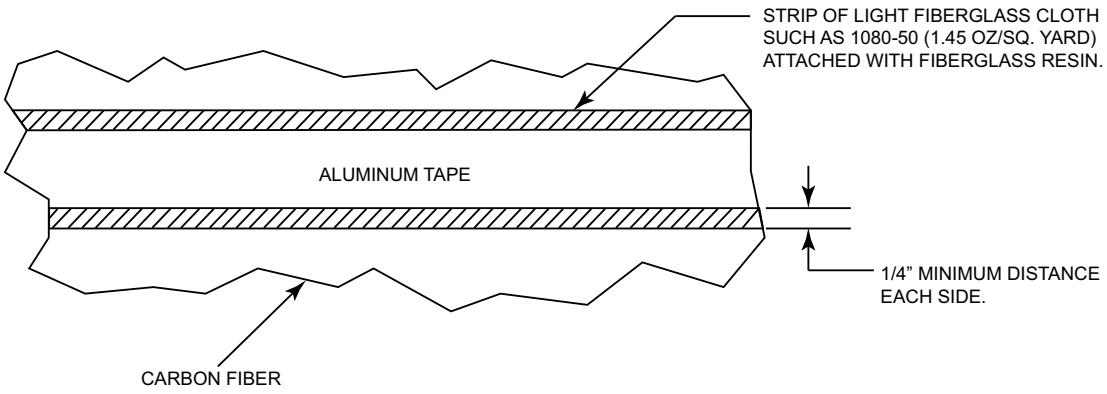

Figure 5-5 Fiberglass Insulation for Carbon Fiber Material

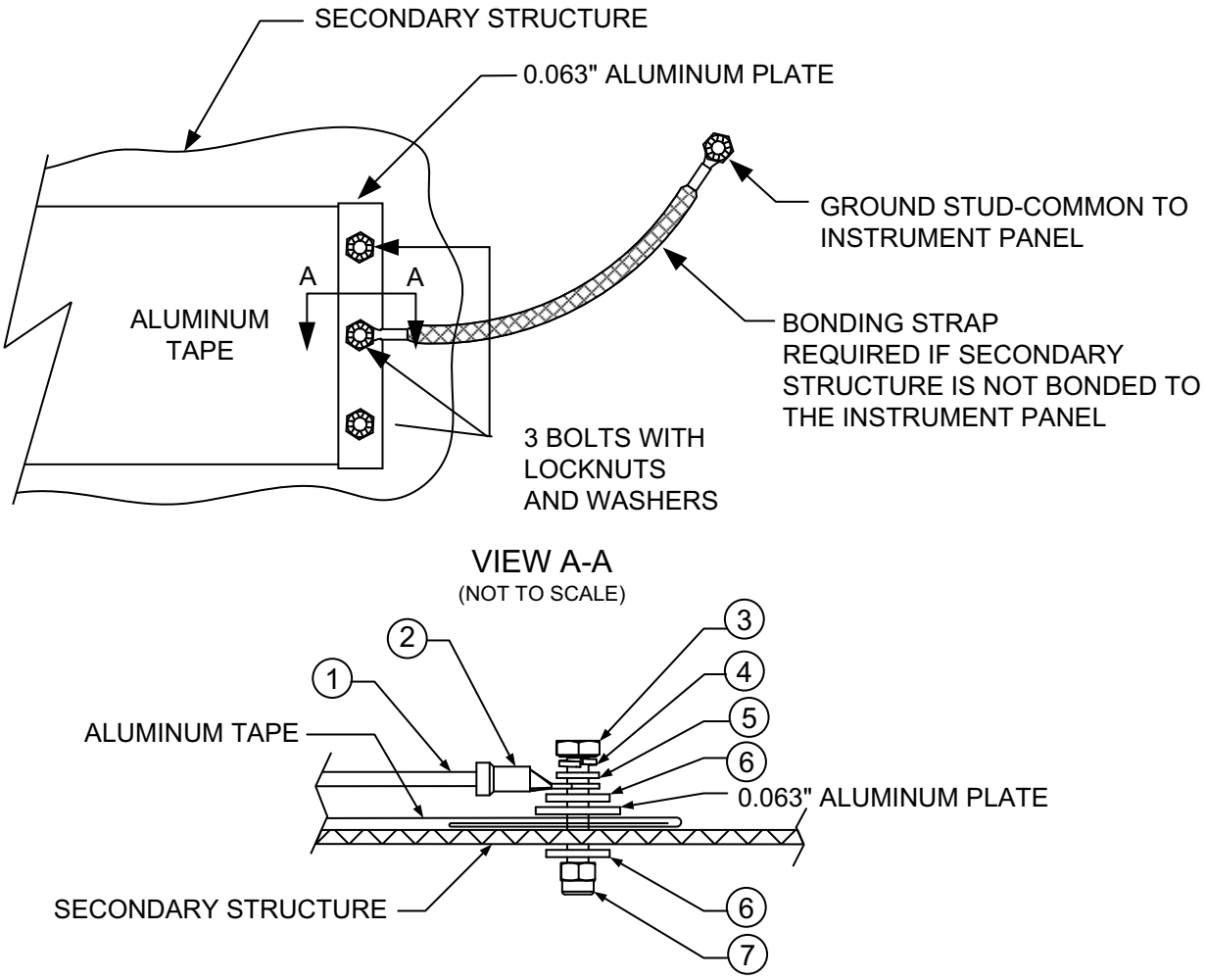

Figure 5-6 Grounding to Instrument Panel with Aluminum Tape and Grounding Strap

Table 5-1 Instrument Grounding Parts

Item Number Refer to Figure 5-6	Description
1	Tinned copper flat braid, 3/4", QQB575F36T781 **or** Tinned copper tubular braid, 7/16", QQB575R30T437
2	Terminal lug, 5/16”, uninsulated, MS20659-131
3	Bolt, 5/16”, AN5-XA
4	Lock washer, 5/16”, NASM35338-45
5	Flat washer, 5/16”, NAS1149F0563P
6	Flat washer, 0.063-inch thick, NASM970-5 (AN970-5)
7	Locknut, 5/16”, AN363-524

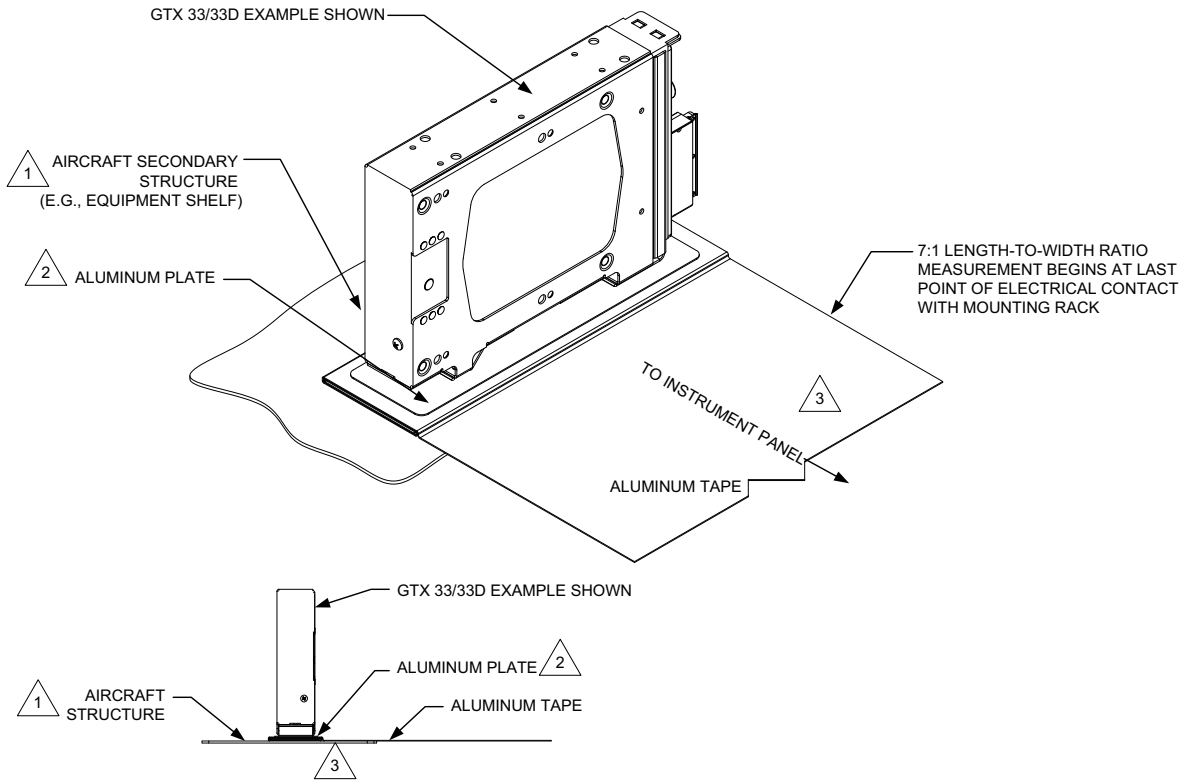

NOTES

1. AIRCRAFT SECONDARY STRUCTURE, SUCH AS AN EQUIPMENT SHELF, MUST HAVE CLEARANCE ON THE OPPOSITE SIDE FOR HARDWARE NEEDED TO INSTALL THE GTX 33/330/3X5 TO THE AIRCRAFT STRUCTURE.

2. RECOMMENDED THICKNESS OF ALUMINUM PLATE IS 0.032 INCHES. ALUMINUM PLATE LENGTH AND WIDTH MUST BE AT LEAST 0.5 INCHES LARGER THAN THE GTX 33/330/3X5 FOOTPRINT (MINIMUM 10.45” X 2.78” FOR SINGLE BONDING PLATE OR 1.75” X 3.11” FOR OPTIONAL DUAL BONDING PLATES). REMOVE ALL BURRS AND SHARP EDGES, RADIUS ALL SHARP CORNERS (1.25-INCH MINIMUM, 0.25-INCH RECOMMENDED).

3. GTX 33/330 UNIT MUST BE INSTALLED ON A HORIZONTAL SURFACE, BUT ORIENTATION IS UNRESTRICTED.

Figure 5-7 Remote Mount GTX Example

5.2 Remote Mount

In aircraft with tubular truss airframes, equipment shelves are typically mounted using clamps. Figure 5-8 illustrates example of such a shelf.

1. A minimum of four MS21919 clamps are required, two per edge in offset pattern, each located close to shelf corner. Shelf may not be thinner than 0.08 inches.
2. AN742 clamps are required for electrical bonding. Two clamps are required for sizes AN742-10 and smaller and one clamp is required for sizes AN742-11 or larger. Clamp(s) must be electrically bonded to the shelf and airframe truss with surface preparation for electrical bond extending minimum 0.125 inches past the clamp. The resistance between the shelf and the airframe truss must be verified and not exceed 2.5 mΩ. Refer to methods detailed in advisory circular AC 43.13-1B Chapter 11, Section 11, *Clamping*, and Section 15, *Grounding and Bonding*.

Table 5-2 Hardware for Tube-and-Fabric Shelf Installation

Item Number Refer to Figure 5-8	Description
1	Clamp, AN742-XX (dash number selected by tube diameter)
2	Bolt, AN3-XA (dash number selected by length needed at installation)
3	Washers, NASM970-3 (AN970-3)
4	Locking nut, #10
5 (not shown)	Clamp, MS21919-XX (dash number selected by tube diameter)

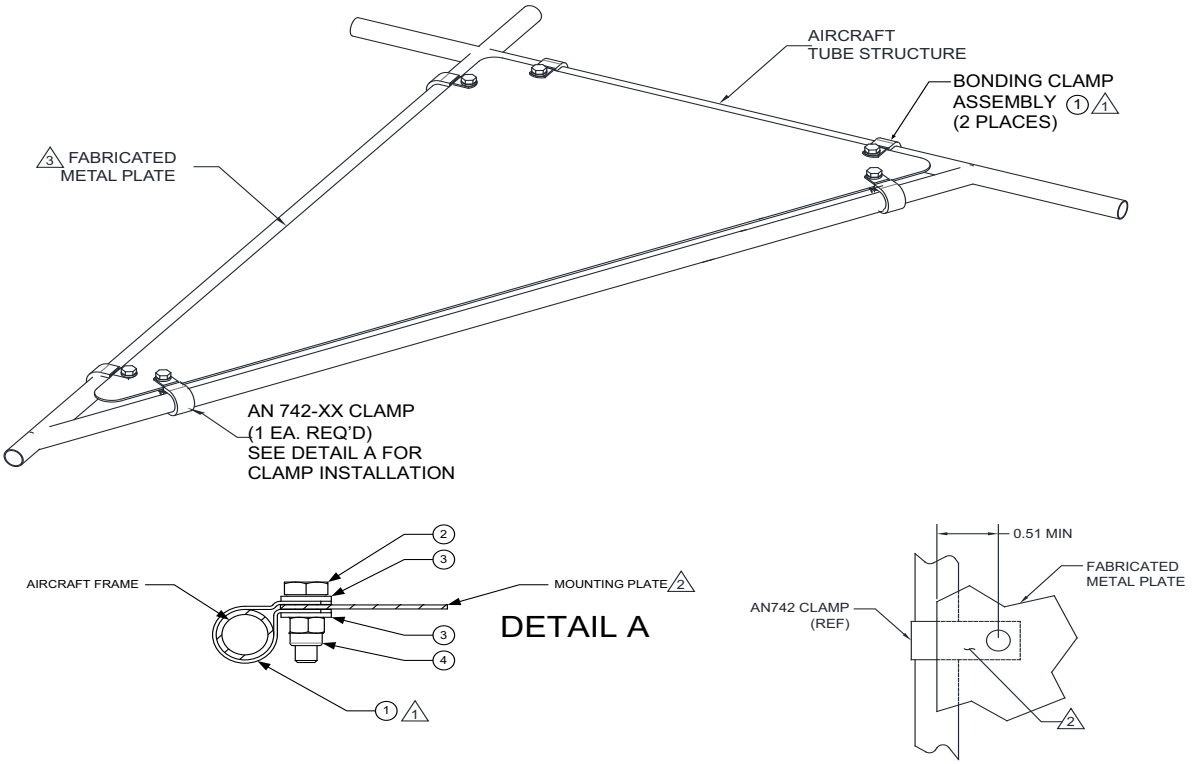

NOTES

△1 IF USING AN742-6 THROUGH AN742-10 CLAMPS, TWO BONDING CLAMP ASSEMBLIES MUST BE USED. IF USING AN742-11 OR LARGER CLAMPS, ONLY ONE BONDING CLAMP ASSEMBLY IS REQUIRED.

△2 INSTALL BONDING CLAMP UNDER FABRICATED PLATE. MAKE SURE THERE IS MAXIMUM CONTACT AREA BETWEEN CLAMP AND FABRICATED METAL PLATE. FOLLOW GUIDANCE IN SECTION 3.14 FOR ELECTRICAL BONDING.

△3 REFER TO THE INSTALLATION REQUIREMENTS IN SECTION 3 FOR GUIDANCE ON MATERIAL, THICKNESS, AND OTHER FABRICATION REQUIREMENTS.

Figure 5-8 Shelf in Aircraft with Tubular Truss Airframe Example

5.2.1 GTX 33/33D and GTX 3X5R Installations

The existing aircraft avionics shelf is the preferable location for a remote-mounted transponder. The selected location must allow access for inspection and service. When installing remote transponder:

1. The combined weight of added transponder (including racks and connectors) and the weight of the existing equipment already installed on the shelf must remain within the established weight limit for equipment installed on the existing shelf (as referenced by a placard or in the aircraft records).
2. The base of the unit rack must not be deformed. The GTX 33X rack and the GTX 335R/345R vertical rack can be mounted vertically only. The GTX 335R/345R with standard remote rack can be mounted vertically or horizontally. For the GTX 345R with Bluetooth enabled, the GTX 345R rack must be installed such that one of the unit sides (any side) is within ±30° yaw of the aircraft centerline for the internal attitude sensor to pass calibration. Refer to Appendix A for remote rack drawings.
3. When drilling fastener holes in the existing shelf, the added holes must maintain a minimum of 2d edge distance (d is fastener diameter) from the shelf edges and 3d edge distance from existing holes. If added holes do not meet this criteria, a new shelf needs to be procured from the aircraft manufacturer or fabricated in accordance with the model-specific standard practices manual or structural repair manual, if allowed. Alternatively, the replacement shelf shall:
    a. Use the same material and have the same thickness as the existing shelf. If the material used in the construction of the existing shelf is not known, 2024-T3 aluminum per AMS-QQ-A-250/5 can be used. If corrosion protection methods are not specified by the model-specific aircraft standard practices manual, the shelf must be conversion coated per MIL-DTL-5541 Type II or MILDTL-81706 Type II and primed with high-solids chemical and solvent resistant epoxy primer per MIL-PRF-23377, Class N.
4. Surface around rack fastener holes facing the unit rack must be prepared for electrical bond per Section 3.14.

5.2.2 G950/G1000 Installation

Existing GTX 32 or GTX 33 units in a G1000 system rack can be replaced by the GTX 3X5R, in which case the GTX 3X5R should be mounted in the same location. The nut plate kit, part of existing GTX 32 or GTX 33 modular rack, should be reused to fasten the GTX 3X5R modular rack to the G1000 system rack. Alternatively, the GTX 3X5R can be installed elsewhere in the aircraft using standalone remote mount.

Table 5-3 Remote Rack Fasteners

Unit	Hardware	Quantity
GTX 33/33D	#8, pan head	4
GTX 3X5R standard remote rack	#6, flat head	6
GTX 3X5 vertical mount rack (base)	#10-32 100 degree flat head	6

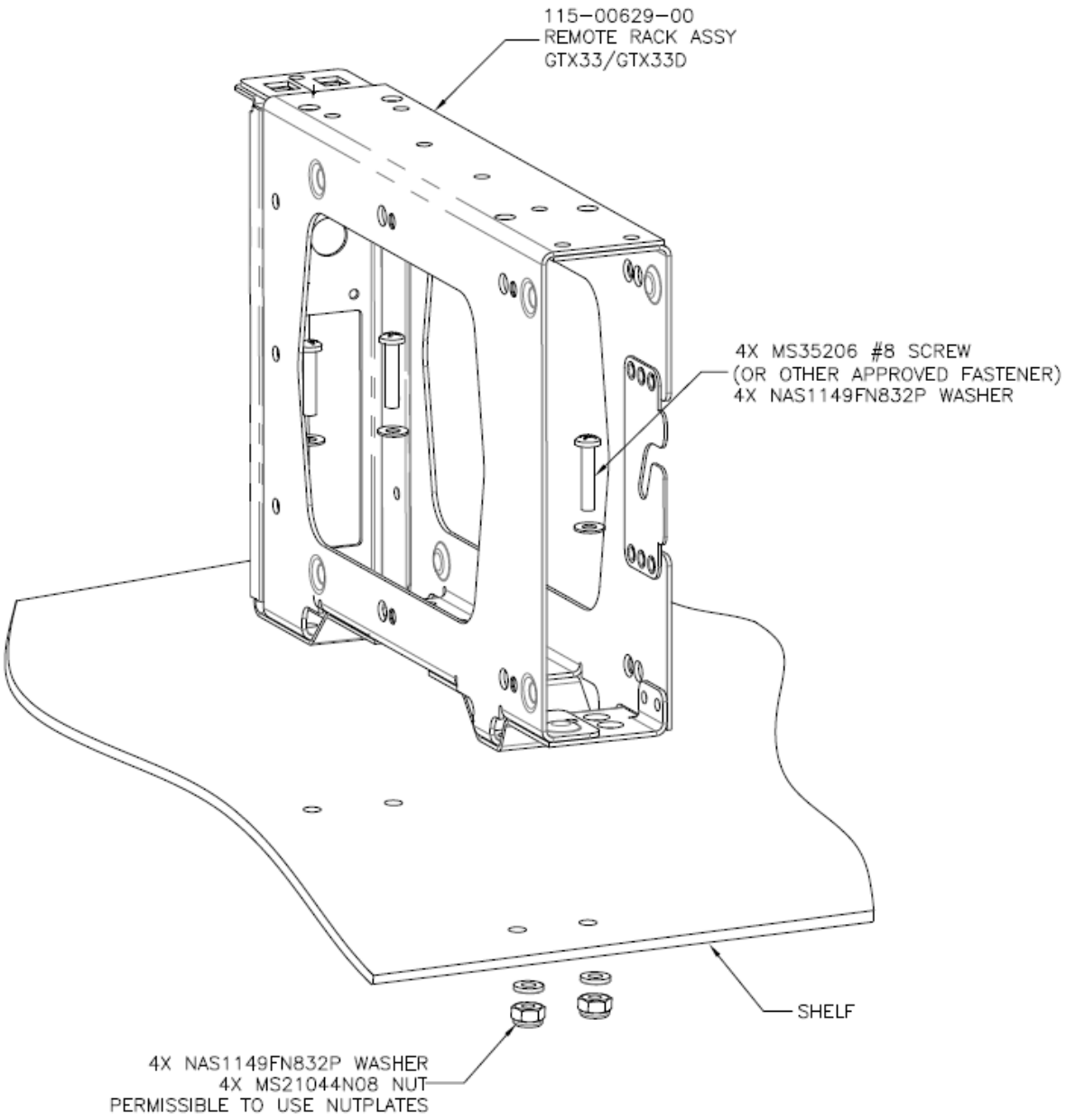

~~Figure 5-9 GTX 33/33D Installation Example~~

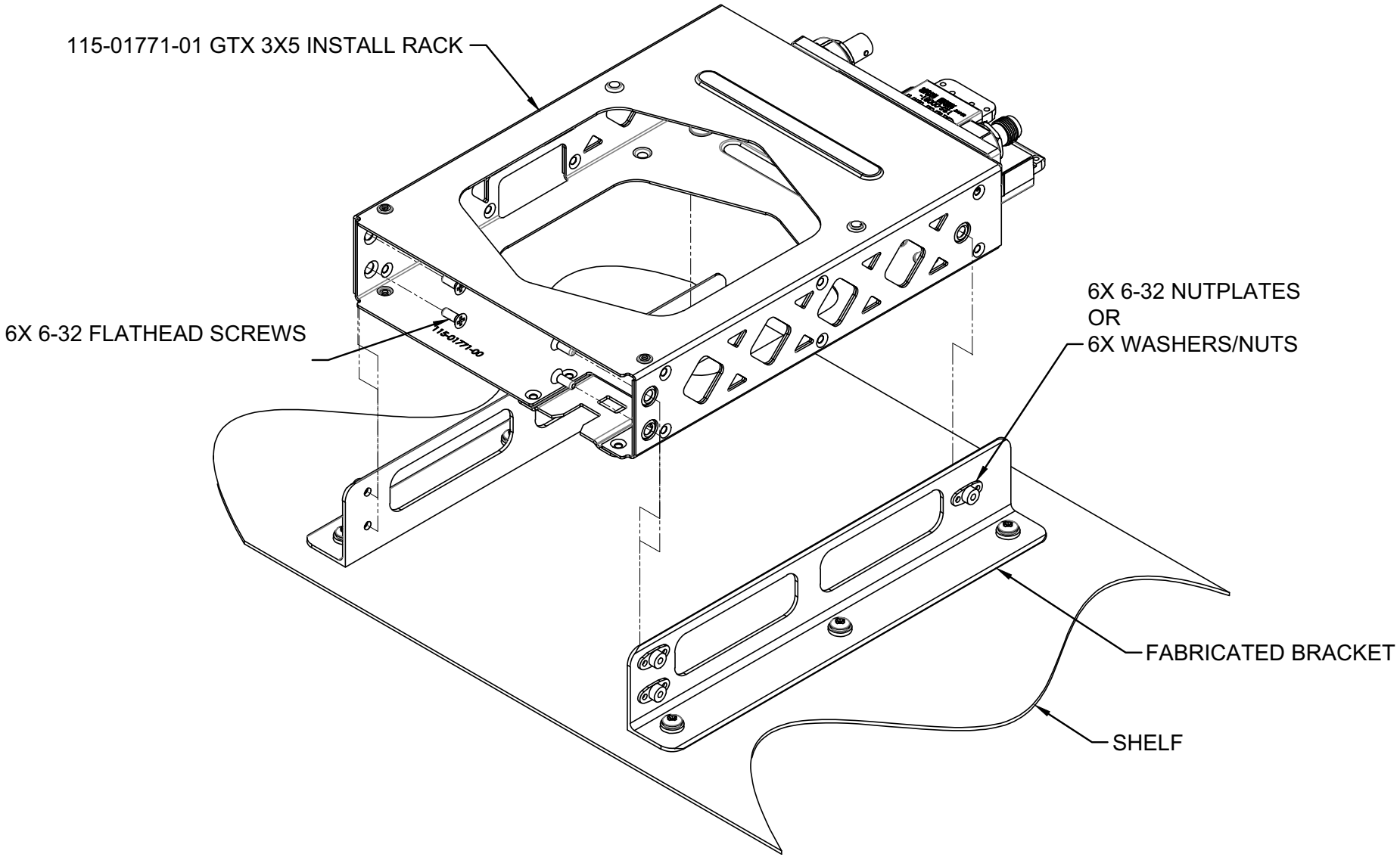

~~Figure 5-10 GTX 3X5 Standard Mount, Installation Example~~

WIDTH DETAIL

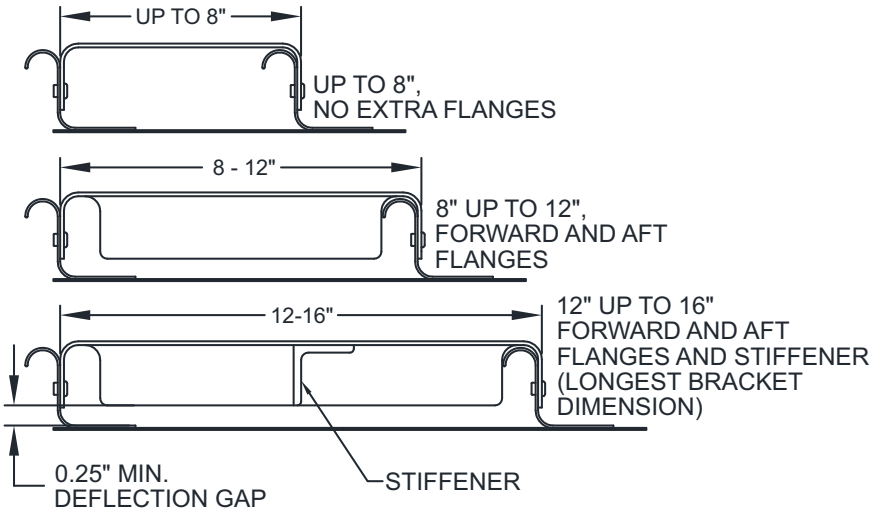

MAX. HEIGHT DETAIL

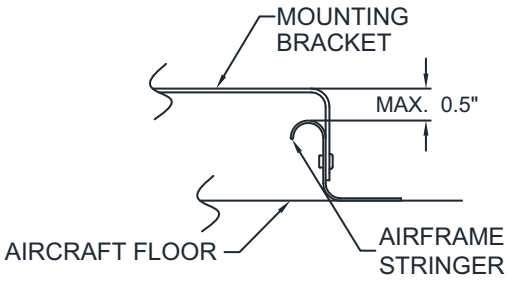

FASTENER SPACING

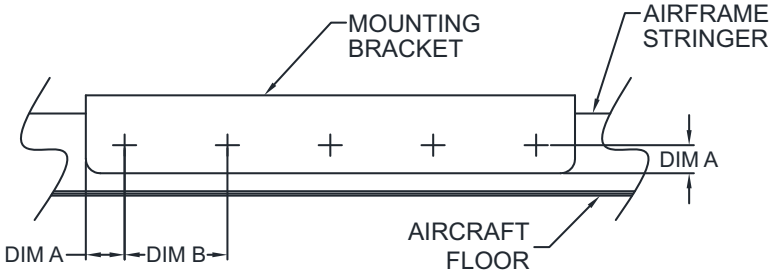

CORRECT GUIDELINE TABLE:

HARDWARE	DIM. A		DIM. B
	MIN	MAX	
RIVETS	2*D	4*D	4*D - 8*D
SCREWS	2*D	4*D	4*D - 10*D

NOTE: "D" IS THE DIAMETER OF FASTENER

Figure 5-11 General Bracket Design

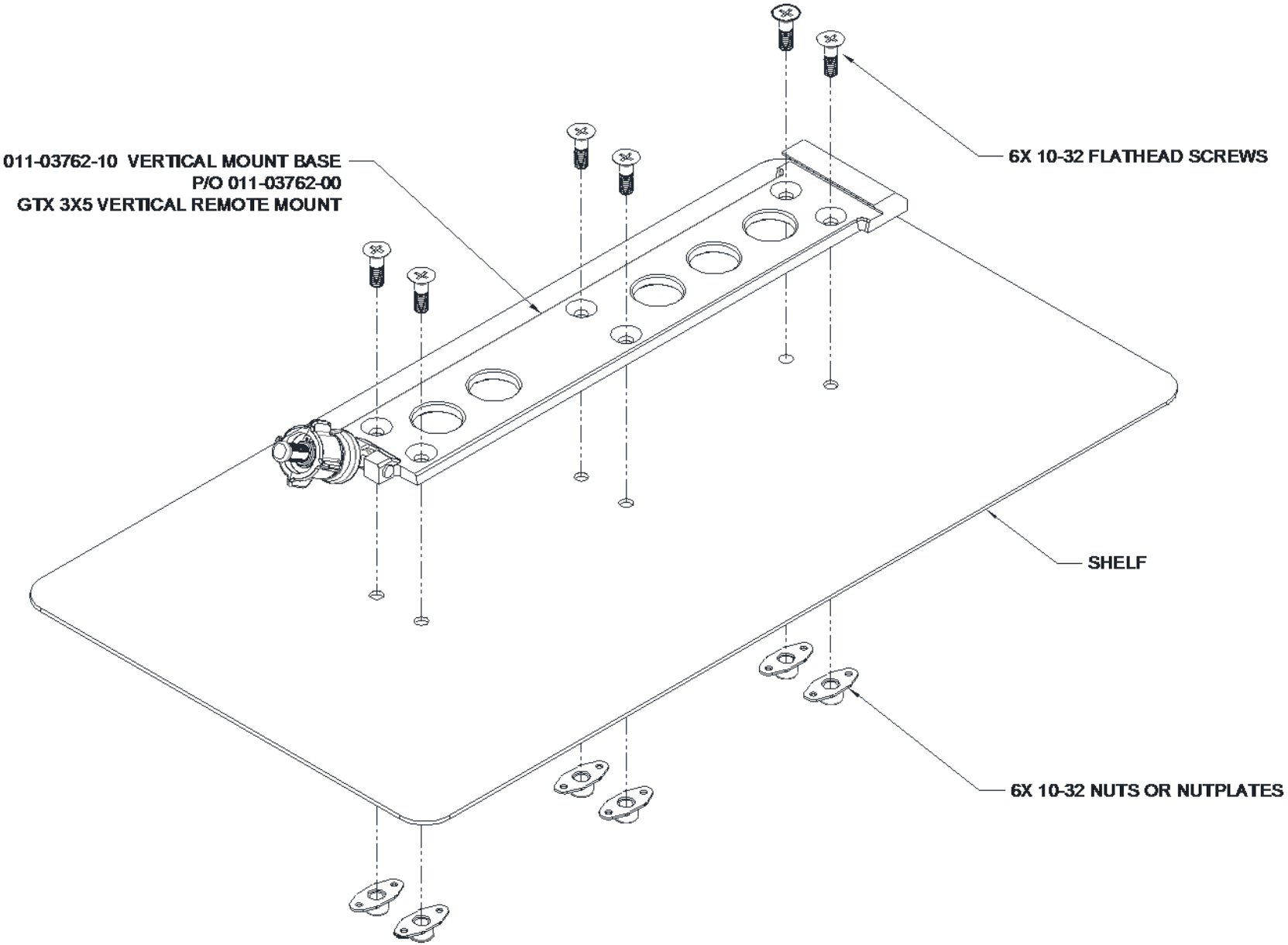

Figure 5-12 Vertical Remote Mount Installation Example

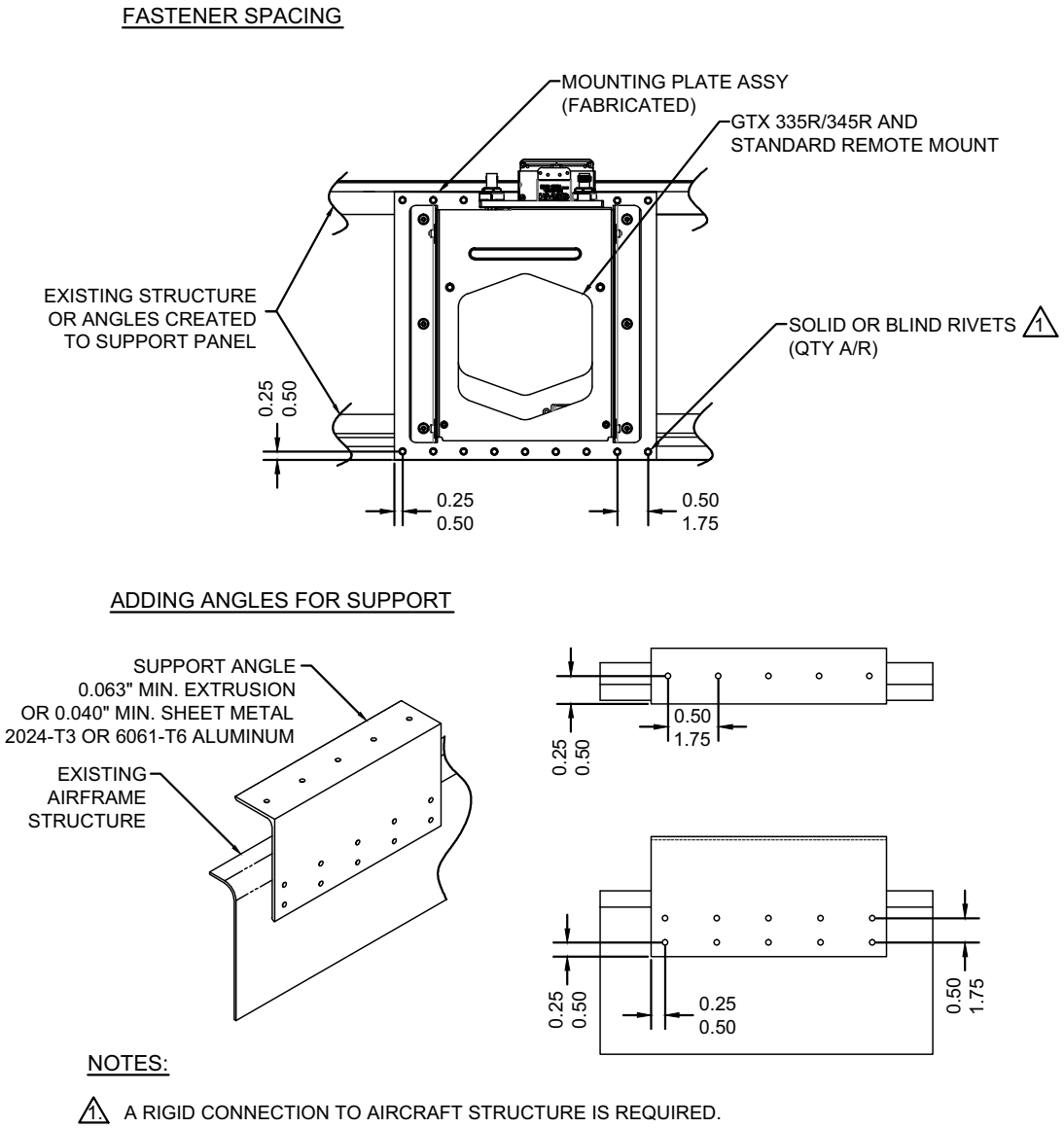

~~Figure 5-13 Transponder Remote Mount Bracket Example~~

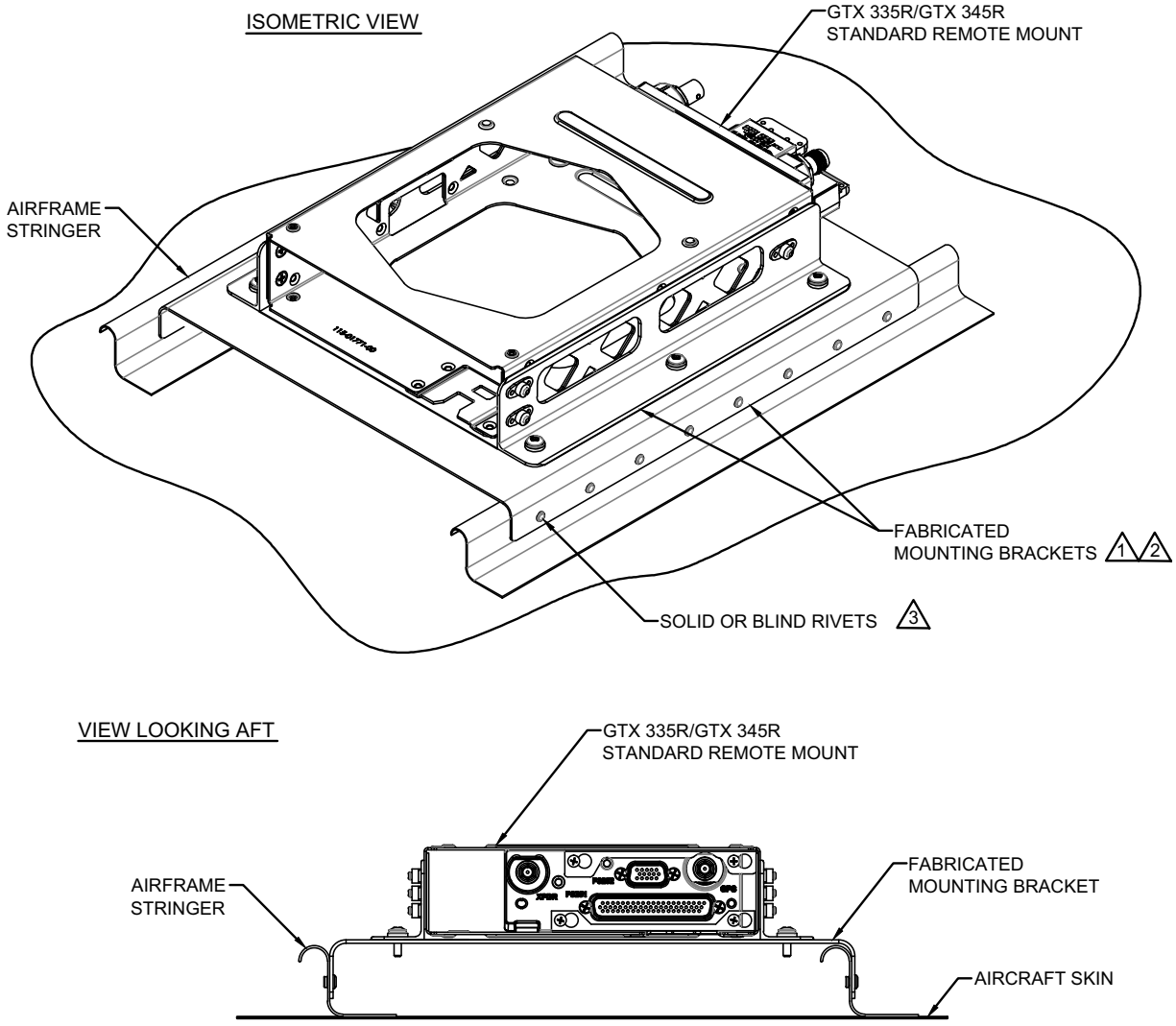

NOTES:

1. SEE GENERAL INSTALLATION REQUIREMENTS (SECTION 4) FOR GUIDANCE ON MATERIAL TYPE, THICKNESS, AND OTHER FABRICATION REQUIREMENTS.
2. APPLY CORROSION PROTECTION AS DEFINED IN SECTION 4 INSTALLATION REQUIREMENTS.
3. A RIGID CONNECTION TO AIRCRAFT STRUCTURE IS REQUIRED. USE BLIND OR SOLID RIVETS.

~~Figure 5-14 GTX 3X5R Remote Mount Installation Example~~

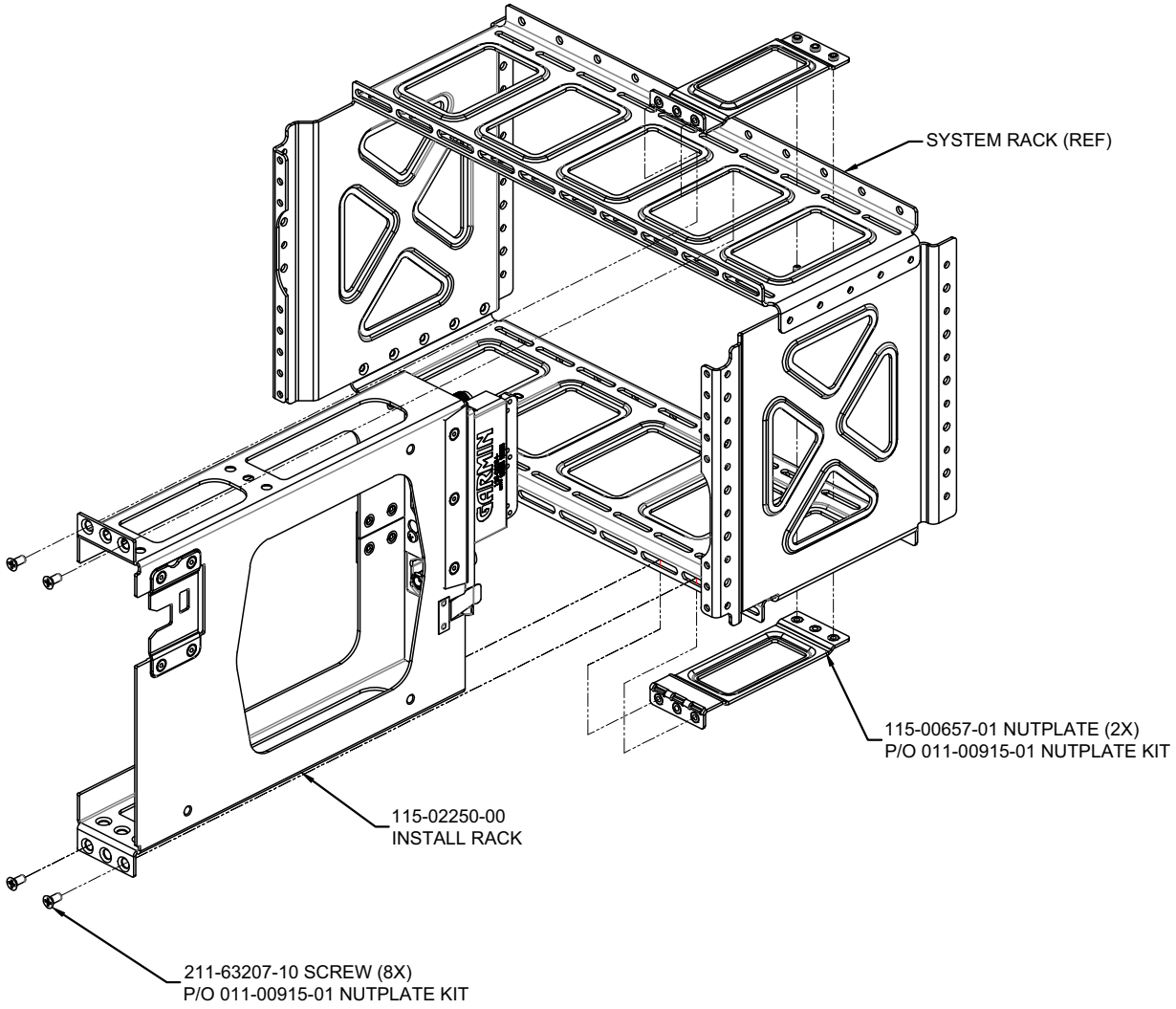

~~Figure 5-15 G1000 Remote Mount Installation Example~~

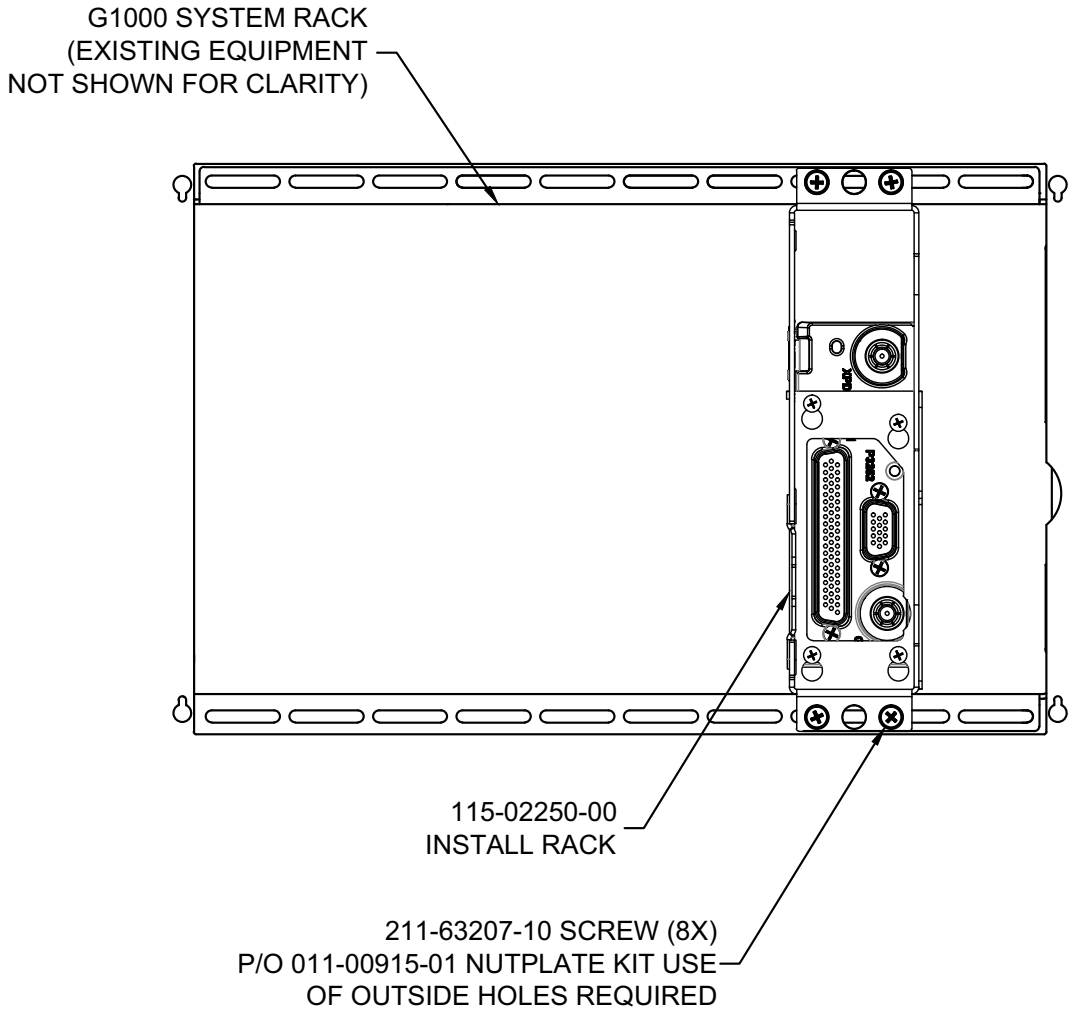

~~Figure 5-16 G1000 Remote Mount Installation, View Looking Forward~~

5.2.3 Discrete Annunciator Installation and Removal

An annunciator can be installed on the aircraft instrument panel; “TRAFFIC” for installations that do not have a traffic display or “ADS-B POSN FAIL” for installations that do not annunciate an ADS-B Out failure. If a Gables 7534 or Collins CTL-92/92E transponder controller is interfaced to a GTX 3X5, an “ADS-B POSN FAIL” annunciator must be installed in the aircraft instrument panel.

Installation

1. Locate discrete annunciator on instrument panel.
2. Install annunciator lamp in instrument panel.

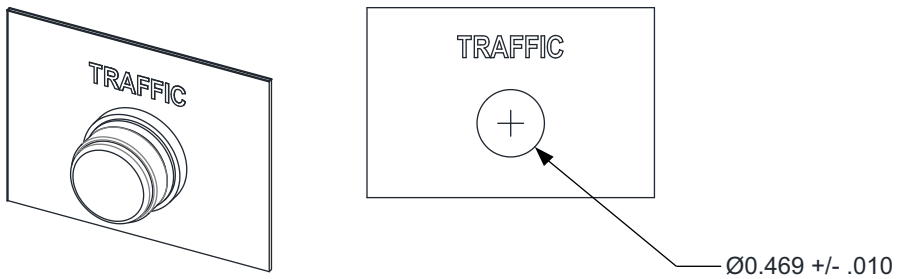

NOTES:

1. DIMENSIONS: INCHES
2. MODIFY INSTRUMENT PANEL BY DRILLING A HOLE THROUGH THE PANEL. CLEAN, DEBURR, AND APPLY CORROSION PROTECTION TO ANY BARE METAL CREATING BY DRILLING THE HOLE THROUGH THE PANEL. USE ZINC CHROMATE PRIMER PER FED STD TT-P-1757, EPOXY PRIMER MIL-P-23377, OR OTHER CORROSION PROTECTION AS SPECIFIED BY THE AIRCRAFT MANUFACTURER. APPLY ARTWORK USING SILK SCREEN OR SIMILAR METHOD. PREFERRED FONT AND SIZE IS ARIAL NARROW BOLD, 10 PT. ALTERNATELY, A LABEL WITH SIMILAR FONT HEIGHT AND SIZE MAY BE USED.

Figure 5-17 External Traffic Annunciator

Annunciator Lamp(s) Removal

1. Remove the annunciator lamp(s) from the instrument panel.
2. Disconnect wiring.

5.3 General Electrical Installation

5.3.1 Wiring (Addition/Change)

The modifications contained in this section are mandatory and applicable for all installations in order to meet the requirements of this STC.

- Refer to Appendix C for equipment compatibility and configuration
- Refer to Appendix B for the approved interface diagrams

5.3.2 Special Tools Required

A crimp tool meeting MIL specification M22520/2-01 and a positioner/locator are required to make sure there are consistent, reliable crimp contact connections for the D-sub connector. Refer to Table 4-6 for a list of recommended crimp tools.

5.3.3 Power Distribution

Circuit protection for the GTX must be a push-pull manually resettable circuit breaker (e.g., MS26574 or MS22073 Series circuit breakers). The circuit breaker must be labeled as specified in Appendix B and be readily accessible to the pilot.

5.3.4 Wire and Cable Considerations

Make sure damage does not occur to the wiring and cables during installation.

- Refer to FAA AC 43.13-1B for installation guidance for wire routing and installation

5.3.5 Coaxial Cable Preparation

Follow the manufacturer's instructions for coaxial cable preparation.

5.3.6 Wire Harness Construction

GTX 33/330 and GTX 335/335R units use a single 62 pin D-sub connector.

GTX 345/345R units use a 62 pin D-sub and a 16 pin D-sub connector.

Except for the antenna(s) and shield ground, all electrical connections are made through these D-Sub connectors. Shield grounds are terminated to the shield ground block attached to the backshell of the D-sub connectors.

- Refer to Section 10 for connector pinout information
- Refer to Appendix B for interconnect wiring diagrams and cable requirements for each signal

5.3.7 Shielded Cable Preparation

NOTE

Solder sleeves with pre-installed shield drains should be used instead of separate shield terminators and individual wires. Although separate shield terminators and individual wires can be used, a preferred solder sleeve is the Raychem S02 Series with the thermochromic temperature indicator. These solder sleeves come with a pre-installed lead and effectively take the place of items 2 and 3 in Figure 5-18. For detailed instructions on use, refer to the Raychem installation procedure.

Prepare all of the shielded cables using one of the methods shown. Keep shield drain components as short as practical, with a maximum length of 3 inches.

The procedures in this section provide an outline for all shield wiring preparations (existing wiring included) terminated at the GTX connectors. Refer to Figure 5-18 for shielded cable preparation.

1. At the end of the shielded cable (**3**), strip back a 2.5-inch maximum length of the jacket to expose the braid.
2. Remove this exposed braid.
3. Carefully score the jacket 1/4 to 5/16 inches from the end.
4. Remove the jacket to leave the braid exposed.
5. Connect a 20 or 22 AWG wire (**1**) to the exposed shield of the prepared cable assembly. Refer to AC 43.13-1B Chapter 11 for termination techniques.
6. Slide a shield terminator (**3**) onto the prepared cable assembly and connect the wire (**2**) to the shield using a heat gun approved for use with solder sleeves.
   - The chosen size of solder sleeve must accommodate both the number of conductors present in the cable and the wire (**2**) to be attached
   - Repeat steps 1 through 3 as needed for the remaining shielded cables
7. Strip the exposed twisted wire 0.17 inches from the end.
8. Crimp pins (**4**) onto the wires.
9. Crimp a correctly sized ring terminal (**5**) onto the end of each shield drain (**2**).
10. Repeat steps 4 through 6 for the remaining wires/shields.
11. Using the interconnect diagrams in Appendix B for the applicable connections and pinouts, insert the pin into the connector housing location.
12. Verify the pin is engaged into the connector by gently tugging on the wire.
13. Wrap the cable bundle with silicone fusion tape at the point where the backshell strain relief and cast housing contact the cable bundle.

Table 5-4 Shield Wire Assembly

Refer to Figure 5-18	Description	Garmin P/N	Notes
1	Multiple conductor shielded cable (refer to Appendix B for interconnect diagrams)	As required	[1] [2]
2	Wire, insulated (20-22 AWG), 3” max length	As required	[1] [2]
3	Shield terminator	As required	[1] [2]
4	Pin contacts, #22D	336-00021-00	[4] [5] [6]
5	Ring terminal, #8, insulated, 18-22 AWG,14-16 AWG, 12–10 AWG	MS25036-149 MS25036-153 MS25036-156	[1] [2] [3] [6]

Notes:

[1] Item not supplied in connector kits and must be purchased separately.

[2] Solder sleeve with pre-installed lead can be used instead of items 2 and 3.

[3] Not a Garmin part number.

[4] Supplied as part of sub-assy connector kits for GTX 33/330 or GTX 3X5.

[5] Supplied as part of GTX 33 or GTX 335R/345R Connector Kits.

[6] Part not shown in Figure 5-18.

.

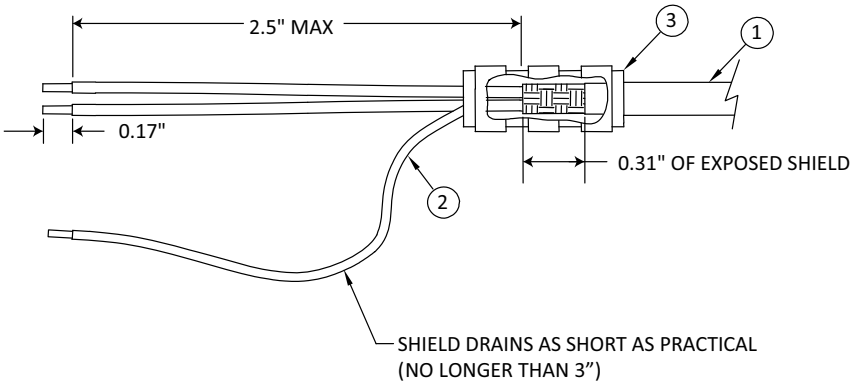

PREFERRED METHOD

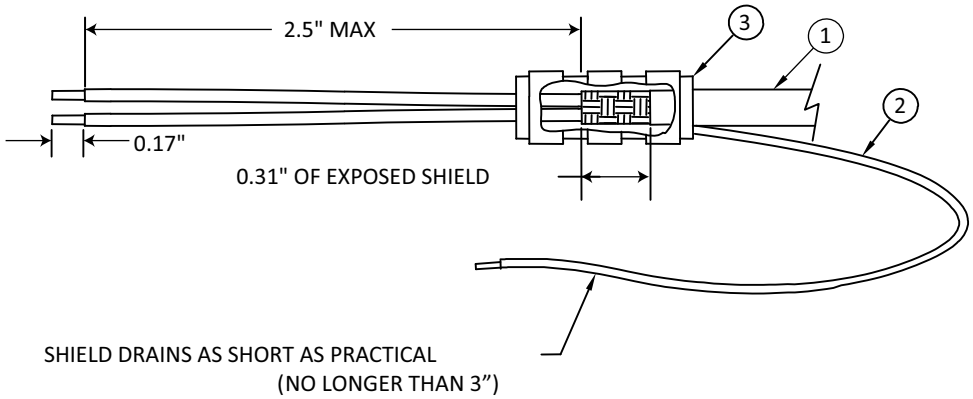

ALTERNATE METHOD

Figure 5-18 Shielded Wire Preparation

5.3.8 Cable Bundle Termination on Backshell Assembly

CAUTION

Do not put the concave side of the strain relief clamp across the cable bundle. Placing the concave side of the strain relief clamp across the cable bundle will damage the cable bundle.

Terminate the cables to the backshell assembly after all shielded cables are prepared in accordance with this section.

1. Terminate the crimped cable bundle contacts in the D-sub connector using the interconnect diagrams in Appendix B for the correct connections and pinouts.
2. Make sure the pin is engaged into the connector by gently tugging on the wire.
3. For GTX 3X5 units, install the configuration module wires into the connector.
   - Refer to Section 5.5 for configuration module installation instructions
4. Wrap the cable bundle with silicone fusion tape at the point where the backshell strain relief and cast housing will contact the cable bundle.
5. Place the smooth side of the backshell strain relief clamp across the cable bundle. Secure using three 4-40 x 0.375" pan head screws.
6. Terminate the ring terminals to the tapped holes on the backshell by placing ring terminal on the 8-32 x 0.312" pan head shield terminal screw in this order before finally inserting the screw into the tapped holes on the shield block:
   a. Split washer
   b. Flat washer
   c. First ring terminal
   d. Second ring terminal (if needed)

5.4 Connector and Backplate Assembly

5.4.1 Connector and Backplate Assembly for GTX 330/330D

NOTE

Each tapped hole on the backshell only accommodates two ring terminals. It is preferred that a maximum of two wires be terminated per ring terminal. This will necessitate the use of a ring terminal, #8, insulated, 14-16 AWG (MS25036-153). If only a single wire is left, or if only a single wire is needed for this connector, a ring terminal, #8, insulated, 18-22 AWG (MS25036-149) can be used. It is permissible to terminate three wires per ring terminal.

The GTX 330 Connector Kit (P/N 011-00583-00) includes Garmin backshell assemblies and Garmin ground adapter assemblies. Backshell connectors give the installer the ability to terminate shield grounds at the backplate assembly using the shield block ground kit.

Refer to Table 5-5 for a list of Garmin part numbers for the D-sub connectors and the backshell assemblies.

1. Prepare all shielded wiring as shown in Figure 5-18.
2. For all 22 gauge and smaller unshielded wiring, strip wire 0.17 inches from the end and crimp pins (P/N 336-00021-00) onto the wires.
3. Insert all (shielded and unshielded) terminated wires into the connector (**6**) in accordance with the aircraft wiring diagrams.
4. Insert all shield ground terminations into the ground block connector (**2**).
5. When all wiring is terminated in the connectors (**2**) and (**6**), attach connectors and backshell to backplate using screws (**4**), as shown in Figure 5-19.

Table 5-5 GTX 330/330D Backshell/Connector Assembly

Refer to Figure 5-19	Description	Garmin P/N	Qty	Notes
1	Backshell	330-00220-37	1	[1]
2	Shield block	330-00228-20	1	[1]
3	Nut plate, D-Sub, 37 pos	125-00056-00	1	[1]
4	Screw, 4-40 x 0.500, PHP,SS/P, w/nylon	211-60234-12	2	[1]
5	Screw, 4-40 x 0.500, FLH100, SS/P, nyl	211-63234-12	2	[1]
6	Connector, D-Sub, HD, 62 pin	330-00185-62	1	[1]
7	Silicone fusion tape	249-00114-00	AR	[2]
8	Wire assembly	Refer to Section 5.4.2	AR	

Notes:

[1] Supplied as part of GTX 330 sub assy connector kit (P/N 011-00583-00).

[2] Not supplied. Must be purchased separately.

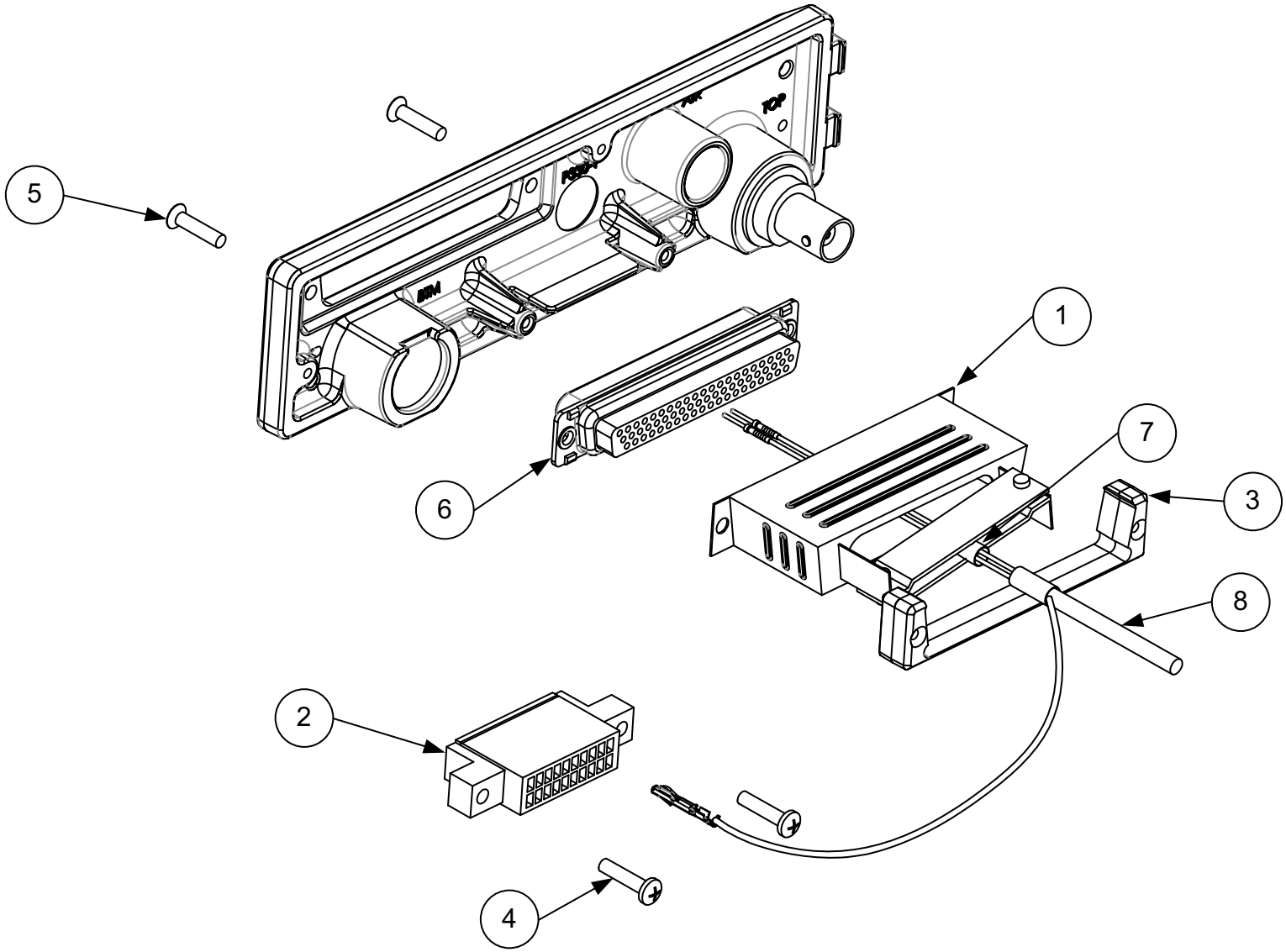

Figure 5-19 GTX 330/330D Backshell Assembly

~~5.4.2 Connector and Backplate Assembly for GTX 33/33D~~

CAUTION

Do not use screws (3) that are too long. Screws should have sufficient length to secure the shield block without protruding into the wire bundle. Screws protruding into the wire bundle can cause damage to the wiring bundle.

Refer to Table 5-6 for the GTX 33/33D installation connector/backshell assembly (P/N 011-01012-01). Backshell connectors give the installer the ability to terminate shield grounds at the backshell housing using the shield block ground kit.

1. For all 22 gauge and smaller unshielded wiring, strip wire 0.17 inches from the end and crimp pins (P/N 336-00021-00) onto the wires.
2. Insert all (shielded and unshielded) terminated wires into the connector (**9**) in accordance with the aircraft wiring diagrams.
3. Attach the shield block (**2**) to the backshell (**1**) by inserting the flathead screws (**3**) through the holes on the shield block and threading into the tapped holes on the backshell (**1**).
4. Wrap the cable bundle with silicone fusion tape (13 or a similar version) at the point where the backshell strain relief and cast housing will contact the cable bundle.
5. Place the smooth side of the backshell strain relief (**6**) across the cable bundle and secure using the three screws (**5**). Make sure each half of the strain relief bar is supporting half of the cable bundle.
6. Attach the cover (**7**) to the backshell using two screws (**8**).
7. Terminate the ring terminals to the shield block (**2**) by placing items on the pan head screw (**10**) in this order:
   a. split washer (**11**)
   b. flat washer (**12**)
   c. first ring terminal
   d. second ring terminal (if needed before inserting the screw into the tapped holes on the shield block)
8. Insert the assembled connector into the backplate.

~~Table 5-6 GTX 33/33D Backshell/Connector Assembly~~

Refer to Figure 5-20	Description	Garmin P/N	Qty	Notes
1	Backshell	125-00084-00	1	
2	Shield block	117-00147-01	1	
3	Screw, 4-40 x 0.250, FLHP100°, SS/P, w/ nylon	211-63234-08	4	
4	Wire assembly	Refer to Table 5-4	AR	[1]
5	Screw, 4-40 x 0.375,PHP,SS/P, w/ nylon	211-60234-10	3	
6	Clamp	115-00499-03	1	
7	Cover	115-00500-03	1	
8	Screw, 4-40x 0.187, FLHP100, SS/P, w/ nylon	211-63234-06	2	
9	Connector, D-sub, HD, 62 pin	330-00185-62	1	
10	Screw, PHP, 8-32 x 0.312", stainless or cad plated steel	MS51957-42 MS35206-242	AR	[1] [2]
11	Split washer, #8, (0.045" compressed thickness) stainless or cadmium plated steel	MS35338-137 MS35338-42	AR	[1] [2]
12	Flat washer, #8, 0.032" thick, 174" ID, 0.375" OD, stainless or cad plated steel	NAS1149CN832R NAS1149FN832P	AR	[1] [2]
13	Silicone fusion tape	249-00114-00	AR	[1]

Notes:

[1] Not supplied. Must be purchased separately.

[2] Not a Garmin part number.

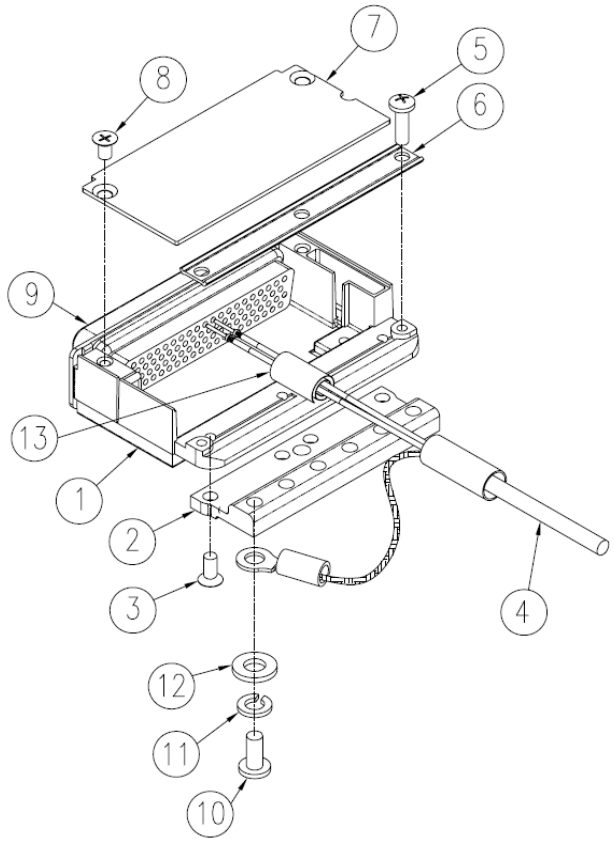

Figure 5-20 GTX 33/33D Connector and Backshell Assembly

~~5.4.3 Connector and Backplate Assembly for GTX 3X5~~

CAUTION

Do not use screws that are too long to secure the shields to the shield block. Screws should have sufficient length to secure the shield block without protruding into the wire bundle. Screws protruding into the wire bundle can cause damage to the wiring bundle.

Refer to Table 5-7 for GTX 3X5 connector kit hardware.

The backplate varies depending on the possible unit and mount selections. Backshell connectors give the installer the ability to terminate shield grounds at the backshell housing using the shield block ground kit.

1. For all 22 gauge and smaller unshielded wiring, strip wire 0.17 inches from the end and crimp pins (P/N 336-00021-00) onto the wires.
2. Insert all (shielded and unshielded) terminated wires into the connector(s) in accordance with the aircraft wiring diagrams.
3. Attach the shield block to the backshell(s) by inserting the flathead screws through the holes on the shield block and threading into the tapped holes on the backshell.
4. Wrap the cable bundle with silicone fusion tape at the point where the backshell strain relief and cast housing will contact the cable bundle.
5. Place the smooth side of the backshell strain relief across the cable bundle and secure using the three screws. Make sure each half of the strain relief bar is supporting half of the cable bundle.
6. Attach the cover(s) to the backshell(s) using two each screws.
7. Terminate the ring terminals to the shield block by placing items on the pan head screw in this order:
   a. lock washer
   b. flat washer
   c. first ring terminal
   d. second ring terminal, if needed before finally inserting the screw into the tapped holes on the shield block
8. Insert the assembled connector into the backplate.

~~Table 5-7 GTX 3X5 Connector Kit Hardware~~

Item	Description	P/N	QTY
1	Connector, hi-density, D-sub, mil crimp 62 socket	330-00185-62	1
2	Sub-assembly, bkshl with hardware, 37/62 pin	011-00950-03	1
3	Sub-assembly, ground, adapter shell, 4&5	011-01169-01	1
4	Screw, 4-40 x 0.250, FLHP 100, SS/P, w/ nylon	211-63234-06	2 ea connector
5	Connector, HiDens, D-sub, mil crp,15 socket	330-00185-15	1
6	Sub-assy, bkshl with hardware, 9/15 pin	011-00950-00	1
7	Sub-assy, ground adapter, shell 1-3	011-01169-00	1

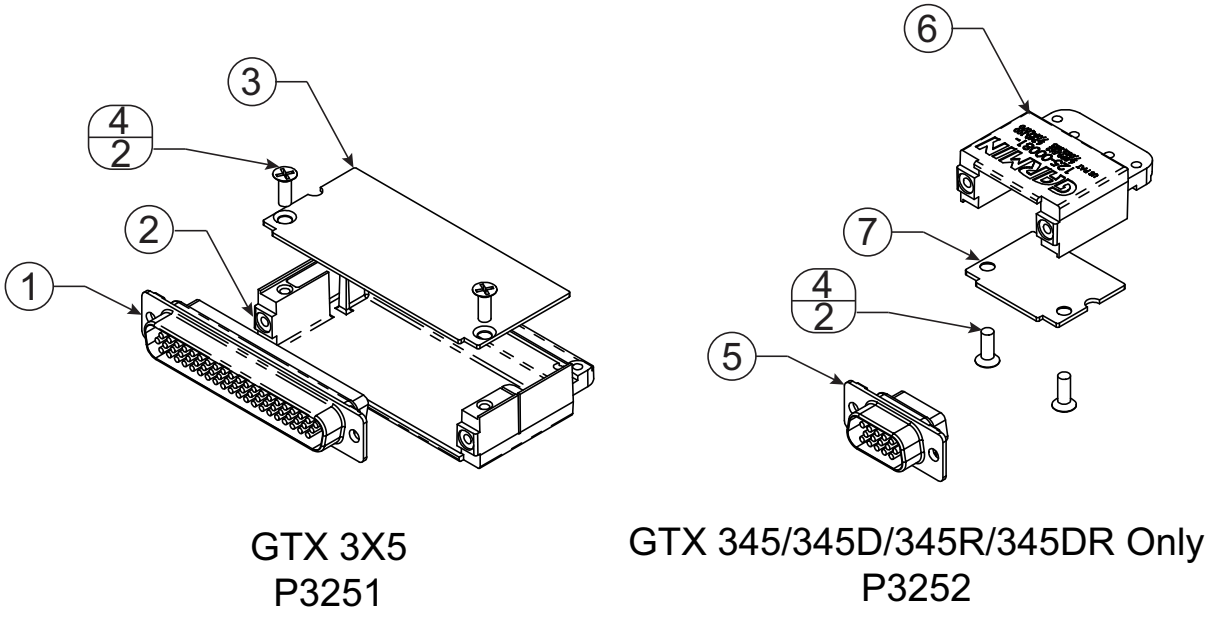

Figure 5-21 GTX 3X5 Connector Kits

~~Table 5-8 Standard and G1000 Mount Backplate Hardware~~

Item	Description	P/N	QTY
1	DCP, connector plate, GTX 3X5, with secondaries	125-00307-10	1
2	Conn, male/female special BNC	330-00053-01	1
3	Washer, shoulder, GNC400	212-00022-00	2
4	Conn, M/F, spec, BNC/TNC	330-00053-02	1
5	Screw, 4-40 x 0.250, PHP, SS/P, w/ nylon	211-60234-08	4

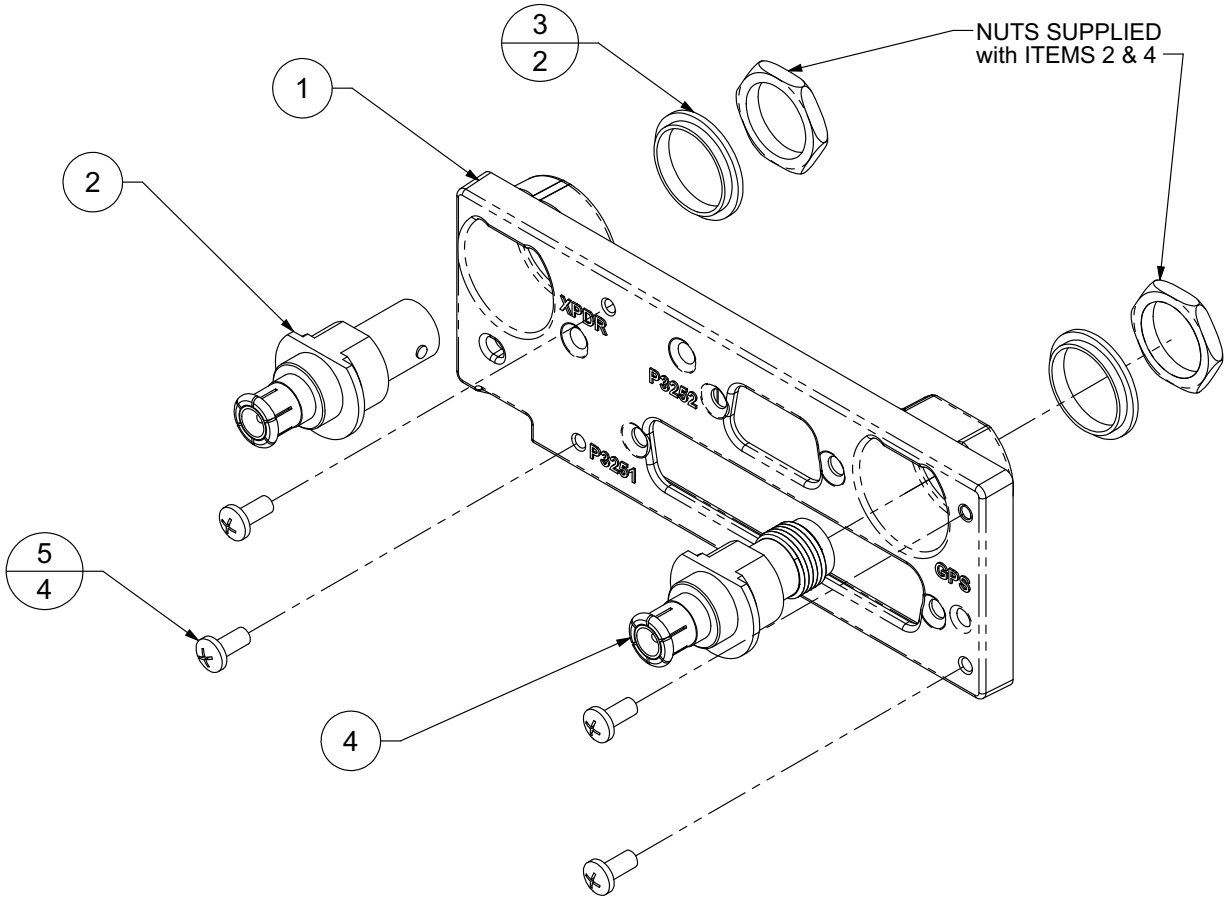

Figure 5-22 GTX 3X5 with GPS Backplate Assembly (P/N 011-02976-01)

Table 5-9 Vertical Mount Backplate Hardware

Item	Description	P/N	QTY
1	DCP, connector plate, GTX 3X5, with secondaries	125-00343-10	1
2	Conn, male/female special BNC	330-00053-01	1
3	Washer, shoulder, GNC400	212-00022-00	1
4	Conn, M/F, spec, BNC/TNC	330-00053-02	1
7	Washer, centering, no float	212-00022-10	1
8	Washer, split lock, size 8	212-00018-04	2
9	Screw, captive, 8-32, 0.62", 3/32 hex drive	211-00290-00	2

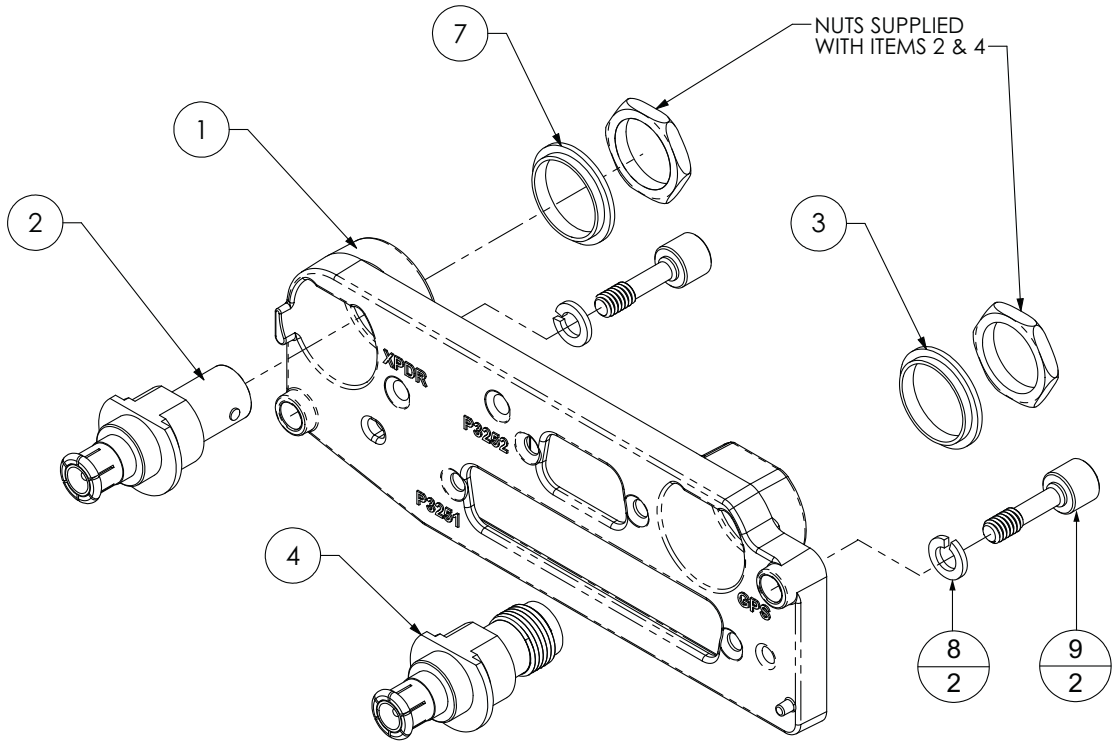

~~Figure 5-23 GTX 3X5 with GPS Backplate Assembly (P/N 011-02976-11)~~

~~Table 5-10 Standard and G1000 Mount Backplate Hardware~~

Item	Description	P/N	QTY
1	DCP, connector plate, GTX 3X5D, with secondaries	125-00473-01	1
2	Conn, male/female special BNC	330-00053-01	2
3	Washer, shoulder, GNC400	212-00022-00	3
4	Conn, M/F, special BNC/RP-SMA	330-00053-08	1
5	Screw, 4-40 x 0.250, PHP, SS/P, w/ nylon	211-60234-08	4

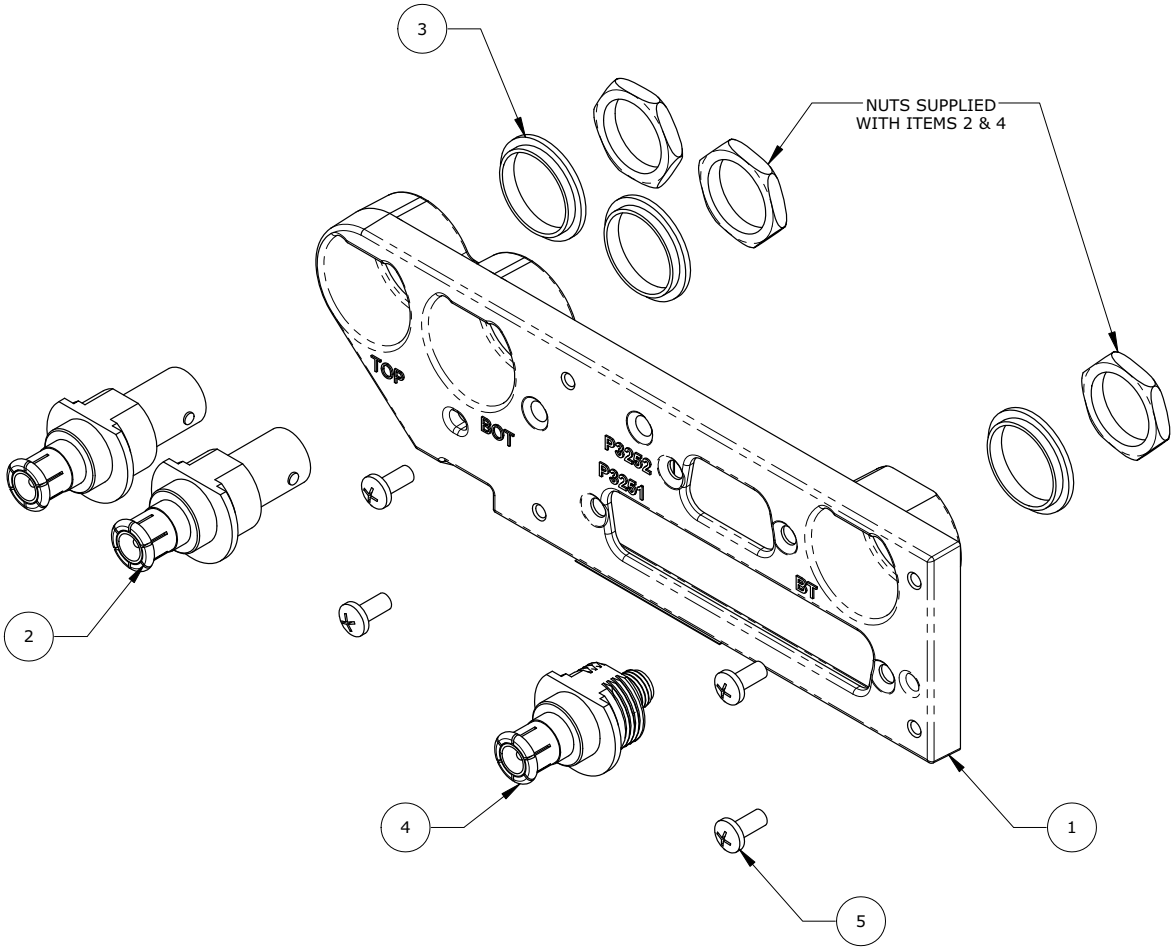

Figure 5-24 GTX 3X5D with Backplate Assembly (P/N 011-04340-02)

~~Table 5-11 Vertical Mount Backplate Hardware~~

Item	Description	P/N	QTY
1	DCP, connector plate, vert, GTX 3X5DR, with secondaries	125-00474-01	1
2	Conn, male/female special BNC	330-00053-01	2
3	Washer, shoulder, GNC400	212-00022-00	3
4	Conn, M/F, special BNC/RP-SMA	330-00053-08	1
5	Screw, captive, 8-32, 0.62”, 3/32 hex drive	211-00290-00	2
6	Washer, split lock, size 8	212-00018-04	2

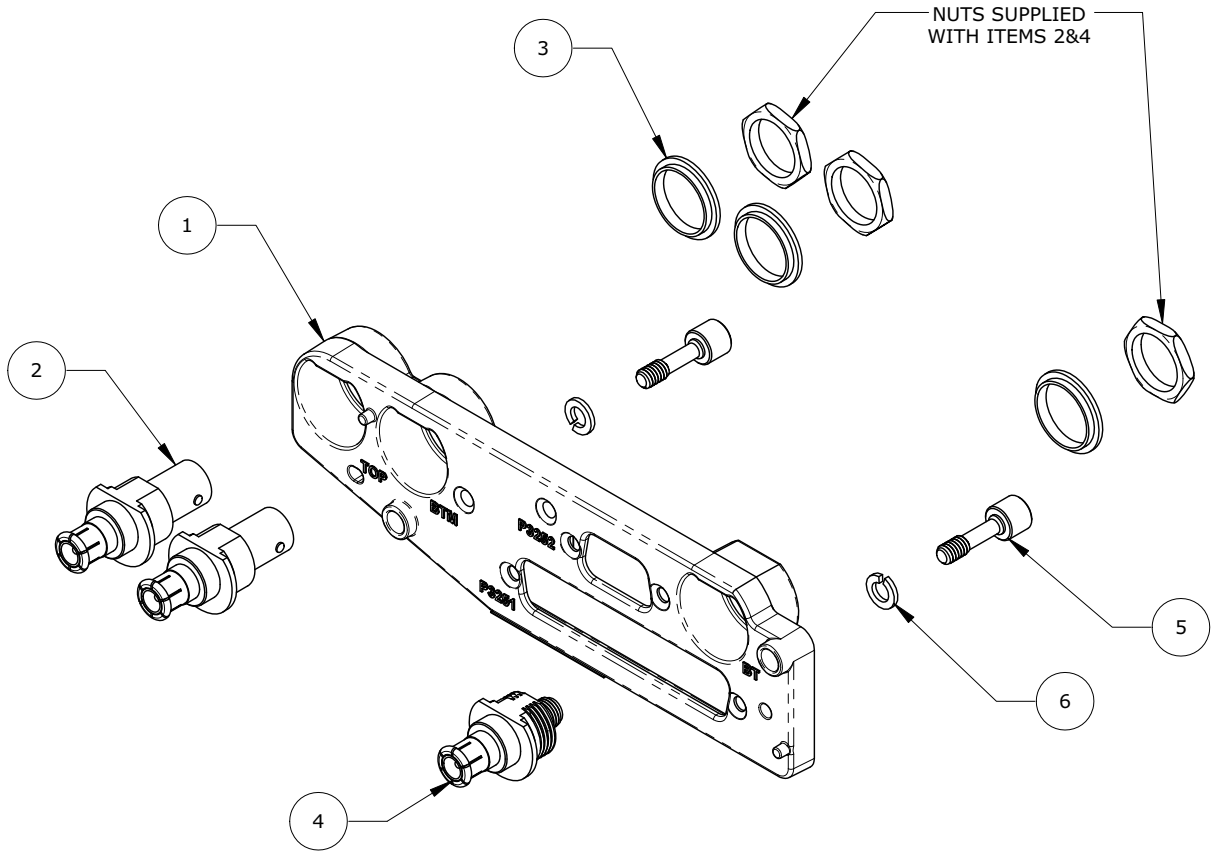

~~Figure 5-25 GTX 3X5DR with Backplate Assembly (P/N 011-04340-10)~~

5.5 GAE and Configuration Module Installation

The GTX 3X5 series transponders require the installation of a configuration module or the GAE with an integrated configuration module.

The GAE is installed on the backplate.The configuration module is installed in the connector assembly, as shown in Figure 5-26.

5.5.1 Configuration Module Installation

1. Crimp pin contacts (**3**) onto each wire of the 4-conductor wire harness (**2**). Strip 0.17 inches of insulation from each wire prior to crimping.
2. Insert newly crimped pin contacts and wires (**2**, **3**) into the correct locations in the connector housing.
3. Plug the 4-conductor wire harness (**2**) into the connector on the PCB board (**1**).
4. Insert PCB board (**1**) into the backshell recess.
5. Orient the connector housing so that the inserted 4-conductor wire harness (**2**) is on the same side of the backshell, as the inserted PCB board (**1**).

Table 5-12 Configuration Module Kit (P/N 011-00979-03)

Item	Description	P/N	QTY
1	Configuration module, PCB board assembly w/EEPROM	011-02178-00	1
2	4-conductor harness	325-00122-00	1
3	Pin contact, crimp, #22D	336-00021-00	4

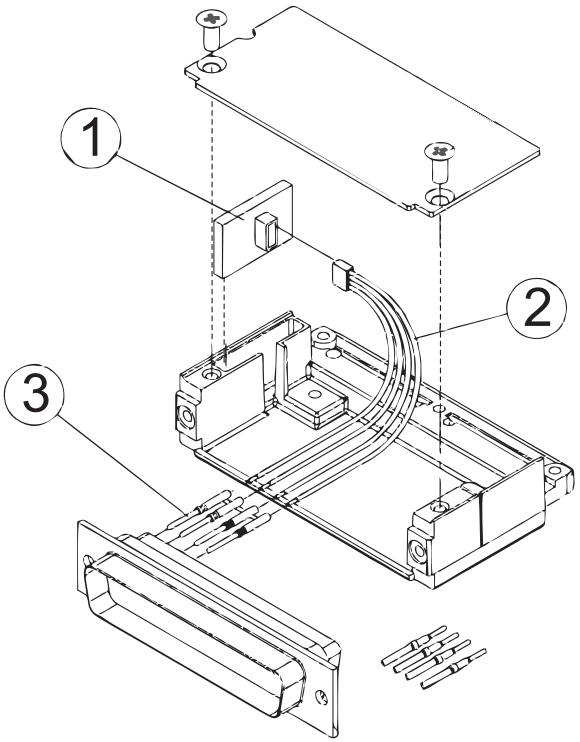

Figure 5-26 Configuration Module Assembly

5.5.2 GAE

1. Crimp pin contacts onto each wire of the 4-conductor wire harness. Strip 0.17 inches of insulation from each wire prior to crimping.
2. Insert newly crimped pin contacts and wires into the correct locations in the connector housing as shown in Appendix B.
3. Mount the GAE to the backplate using two each countersunk screws, as shown in Figure 5-26. Torque screws to 8 in-lbf.
4. Plug the 4-conductor wire harness into the connector on the GAE.
5. Verify there are no pneumatic leaks or sealant in the lines and fittings.

Table 5-13 Altitude Encoder Kit (P/N 011-03080-00)

Description	P/N	QTY
Sub-assembly, Garmin Altitude Encoder, unit only	011-03080-01	1
Screw, 4-40 x 0.250, PHP,SS/P with nylon	211-60234-08	2
Screw, 4-40 x 0.312, FLHP 100,SS/P, nylon	211-63234-09	2
Harness, 4 cond, GAE 12	325-00421-00	1

5.5.3 GAE Installation

NOTE

Verify that no pneumatic leaks, fluids, sealants, or particles are inside the lines and fittings.

The installer is required to:

- Fabricate static hose connections
- Label the hose near the unit
- Attach the aircraft static pressure source to the GAE

1. Secure the GAE to the GTX 3X5 back plate assembly with two screws.
2. Connect the wiring harness to the GAE.
3. Static System Connection:
   a. For aircraft with independent static systems and two transponders, the transponders should be installed on different static systems. If no second static system is available, then it is satisfactory to install transponders on the same static system.
   b. Refer to the aircraft manufacturer's documentation for pneumatic tubing and fitting part numbers that can be used to connect the static system to the GAE female 1/8-27 ANPT. Refer to 14 CFR Part 43 Appendix E for approved practices to connect the GAE to the aircraft static system.
   c. Do not exceed the aircraft manufacturer's minimum bend radius. Avoid routing near aircraft control cables, structure, or high temperature lines, tubing, and components. The GAE must not be the low point of the static plumbing lines to avoid moisture or debris collecting at or near the unit. The static line must be labeled near the unit.
   d. Modifications must not interfere with the previously approved effectiveness of the static system drains, the effectiveness of the alternate static source selector switch (if applicable), or the independence of dual static systems (if applicable).

e. Modifications to the static port surface, aircraft surface near the static port, or other changes that would affect the relationship between measured static air pressure and true ambient static air pressure are outside the scope of this STC.

4. For system configuration, calibration, and checkout, refer to Section 7 and Section 8.

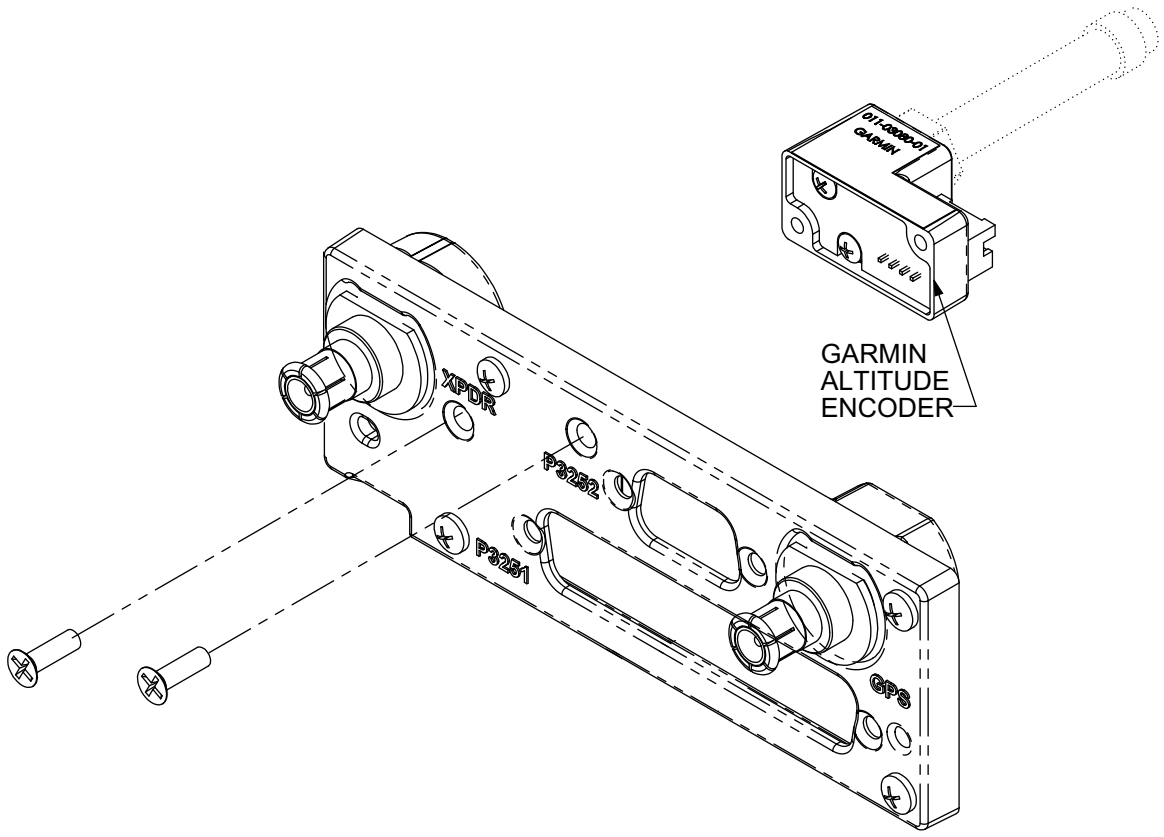

~~Figure 5-27 GAE Assembly~~

The static port is 1/8-27 ANPT female threads. The mating fitting must have 1/8-27 ANPT male threads. Refer to the aircraft manufacturer's documentation for pneumatic tubing and fitting part numbers.

5.6 GTX Installation

Complete the continuity and power checks prior to GTX installation. Install the GTX into the rack and properly secure. The GTX backplate must be connected to the wiring harness and antenna coaxial cables.

5.6.1 GTX 330/330D Installation

CAUTION

Do not overtighten the unit into the rack. Torque exceeding 15 in-lbf can damage the locking mechanism.

NOTE

To ensure the cam mechanism is correctly positioned prior to placing the unit in the rack, it may be necessary to insert the hex drive tool into the access hole and rotate the cam mechanism 90° counterclockwise.

1. Slide the unit straight in the rack until it stops about 1 inch short of its final position.
2. Insert a 3/32” hex drive tool into the access hole located at the bottom of the unit face.
3. Turn the hex tool clockwise while the left side of the bezel is pushed until the unit is firmly seated in the rack.
4. Verify there are no obstructions to the unit fully seating in the rack. The mounting rack may need to be moved aft (toward the pilot) such that the aircraft panel does not obstruct the unit from engaging in rack. Torque to 15 in-lbf.
5. Refer to Section 7 and Section 8 for system configuration, calibration, and checkout.

~~5.6.2 GTX 33/33D Installation~~

1. ~~Visually inspect the connectors to verify there are no bent or damaged pins. Repair any damage.~~
2. ~~Gently insert the GTX 33/33D into its rack. The handle should engage the locking mechanism used to secure the unit in place.~~
3. ~~Push down on the GTX 33/33D handle to lock unit into the rack.~~
4. ~~Lock the handle to the GTX 33/33D body by tightening the Phillips head screw.~~
5. ~~Refer to Section 7 and Section 8 for system configuration, calibration, and checkout.~~

~~5.6.3 GTX 335/345 Installation~~

~~**CAUTION**~~

~~*Do not to overtighten the unit into the rack. Torque exceeding 8 in-lbf can damage the locking mechanism.*~~

~~**NOTE**~~

~~*To ensure the cam mechanism is correctly positioned prior to placing the unit in the rack, it may be necessary to insert the hex drive tool into the access hole and rotate the cam mechanism 90° counterclockwise.*~~

1. Slide the unit straight in the rack until it stops about 1 inch short of the final position.
2. Insert a 3/32” hex drive tool into the access hole at the bottom of the unit face.
3. Turn the hex tool clockwise while the left side of the bezel is pushed until the unit is firmly seated in the rack.
4. Verify nothing obstructs the unit from fully seating in the rack. The mounting rack may need to be moved aft (toward the pilot) so that the aircraft panel does not obstruct the unit from engaging in the rack. Torque to 8 in-lbf.
5. Refer to Section 7 and Section 8 for system configuration, calibration, and checkout.

5.6.4 GTX 3X5R with Standard Remote or G1000 System Rack Mount

CAUTION

Do not to overtighten the unit into the rack. Torque exceeding 8 in-lbf can damage the locking mechanism.

NOTE

T*o ensure the cam mechanism is correctly positioned prior to placing the unit in the rack, it may be necessary to insert the hex drive tool into the access hole and rotate the cam mechanism 90° counterclockwise.*

1. Visually inspect the connectors and pins to make sure they are not bent or damaged. Repair any damage.
2. Slide the GTX 3X5 straight in the rack until it stops about 1 inch short of the final position.
3. Insert a 3/32” hex drive tool into the access hole at the bottom of the unit face.
4. Turn the hex tool clockwise while the left side of the bezel is pushed until the unit is firmly seated in the rack.
5. Verify nothing obstructs the unit from fully seating in the rack. Torque to 8 in-lbf.
6. Refer to Section 7 and Section 8 for system configuration, calibration, and checkout.

5.6.5 GTX 3X5R with Vertical Remote Rack Mount

1. Tilt the unit so that the toe of the GTX 3X5 shoe fully engages the baseplate.
2. Verify the unit is fully engaged and in line with the base.
3. Lift the large knob on the install rack up and over the round protrusion on the base plate.
4. Turn the large knob clockwise until the unit is secure.
5. Carefully install the back plate onto the unit and secure with the two captive screws with a 3/32" hex tool.
6. Refer to Section 7 and Section 8 for system configuration, calibration, and checkout.

6 SOFTWARE LOADING

6.1 GTX 33/330 6-2
6.1.1 GTX 33/330 Software Loading 6-2
6.1.2 GTX 330/330D Software Version Check Interfaced with GTN 6XX/7XX 6-3
6.1.3 GTX 330/330D Software Version Check 6-3
6.2 GTX 3X5 6-4
6.2.1 GTX 3X5/3X5R Software Loading 6-4
6.2.2 GTX 3X5 Software Version Check 6-5
6.2.3 GTX 3X5R Software Version Check Interfaced with G950/G1000 6-6
6.2.4 GTX 3X5 Software Version Check Interfaced with GTN 6XX/7XX 6-6

The software version must match the approved version in *GTX 33X and GTX 3X5 ADS-B AML STC Equipment List (P/N 005-00734-05)*. **Do not** continue if the software version number does not match those specified or if loaded unsuccessfully. Troubleshoot and resolve the issue before continuing. Check software version after software is loaded.

NOTE

Screen shots in this section are provided for reference only. For current approved GTX software versions, refer to GTX 33X and GTX 3X5 ADS-B AML STC Equipment List.

6.1 GTX 33/330

GTX 33/330 Software Update

Updates to software can occur in Configuration mode and Test mode. Updates in Configuration mode on the GTX 330 do not require the **TEST MODE SELECT** switch. The **TEST MODE SELECT** switch is required to update software in the GTX 33 series.

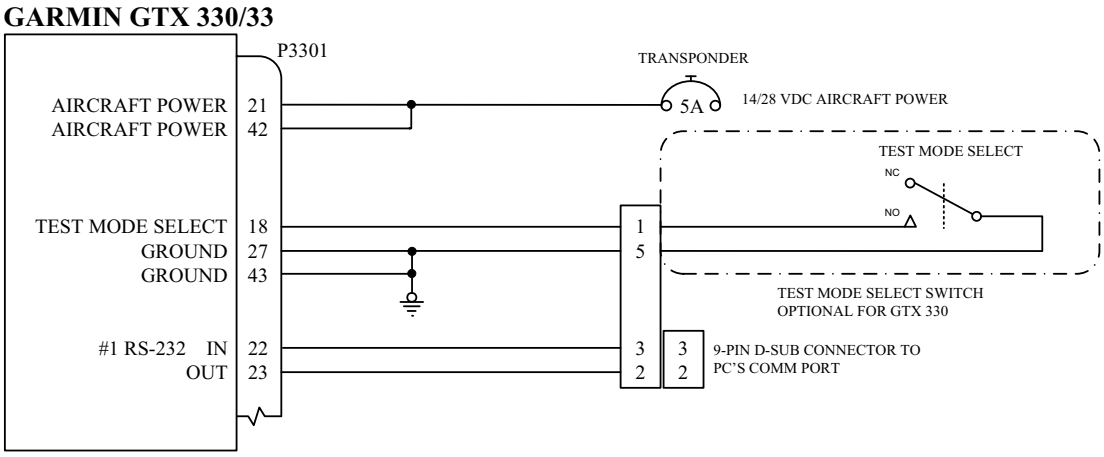

Figure 6-1 Software Update Connection

The GTX comes pre-loaded with software. If new software is installed on a GTX unit, it is required that the software be obtained from the Garmin Dealer Resource Center. For dual GTX 33/330 installations, follow the software loading procedures in Section 6.1.1.

6.1.1 GTX 33/330 Software Loading

CAUTION

Do not operate the GTX 33/330 while removed from the aircraft without first connecting J3302 (GTX 33/330/33D/330D) and J3303 (GTX 330D/33D) to a 50Ω, 5 watt load. The GTX transmits Mode S acquisition squitter replies once per second whether interrogations are received or not. Failure to connect a dummy load to the antenna ports can cause internal equipment damage.

NOTE

The MS-DOS window on the computer communicating with the transponder will show a progress indication (in percentages) for the loading of the software.

1. Access the Dealer Resource Center on Garmin's website.
2. Obtain the transponder software as specified in *GTX 33X and GTX 3X5 ADS-B AML STC Equipment List* and download on a laptop computer.
3. Access target directory for the software on laptop computer.
4. Extract files by double-clicking on the downloaded .exe file.
5. Power off the GTX.
6. Connect the test harness to the GTX and laptop.
7. Set the **TEST MODE** switch (if used) on test harness.
8. Power on the GTX.

9. Double-click on file UPLOADXX.BAT (XX is an incremental number assigned to a specific software version). The program will begin communicating with the GTX.
10. The upload process could take up to 6 minutes to complete.
11. The unit resets and powers on when the upload is complete.
12. Power off the GTX.
13. Remove the test harness between the laptop and the GTX.
14. Install the GTX into the aircraft and power on the system.
15. Verify the correct software version is displayed.

6.1.2 GTX 330/330D Software Version Check Interfaced with GTN 6XX/7XX

Refer to the GTN 6XX/7XX series Pilot's Guides for more information.

1. Push the **External LRUs** key on the ***GTN 6XX/7XX System*** page.
2. Observe the reported GTX software version number.
3. Ensure the identified version number is correct as specified in the *GTX 33X and GTX 3X5 ADS-B AML STC Equipment List*.

Figure 6-2 GTN 6XX/7XX System Page

6.1.3 GTX 330/330D Software Version Check

1. Start in Normal mode.
2. Observe the start-up screen.

Figure 6-3 GTX 330 Start-Up Screen

3. Push the **8** key or the **9** key until the SYS software version screen is displayed.

Figure 6-4 GTX 330 Product Data Page

4. Ensure the software version number matches the approved version as specified in *GTX 33X and GTX 3X5 ADS-B AML STC Equipment List*.

6.2 GTX 3X5

6.2.1 GTX 3X5/3X5R Software Loading

Download the latest approved GTX 3X5/3X5R software in accordance with the Equipment List (P/N 005-00734-05( )) from the Dealer Resource Center on Garmin's website. Refer to the applicable software service bulletin for software loading procedures. The *GTX 3X5 Installation Tool Guide* provides information on how to use the installation tool.

If the unit does not have the approved version of software installed, download it from the Dealer Resource Center on Garmin's website. For dual GTX installations, the software loading procedures must be accomplished on each GTX.

CAUTION

Do not operate the GTX 3X5 while removed from the aircraft without connecting the transponder antenna connection to a 50Ω, 5 watt load. The GTX transmits Mode S acquisition squitter pulses once per second whether interrogations are received or not. Failure to connect a dummy load or antenna during this procedure will cause the transponder to fail and possibly damage the unit.

CAUTION

Do not remove power from the unit until "Update Complete" is displayed next to all selected items. Failure to do so could result in equipment damage.

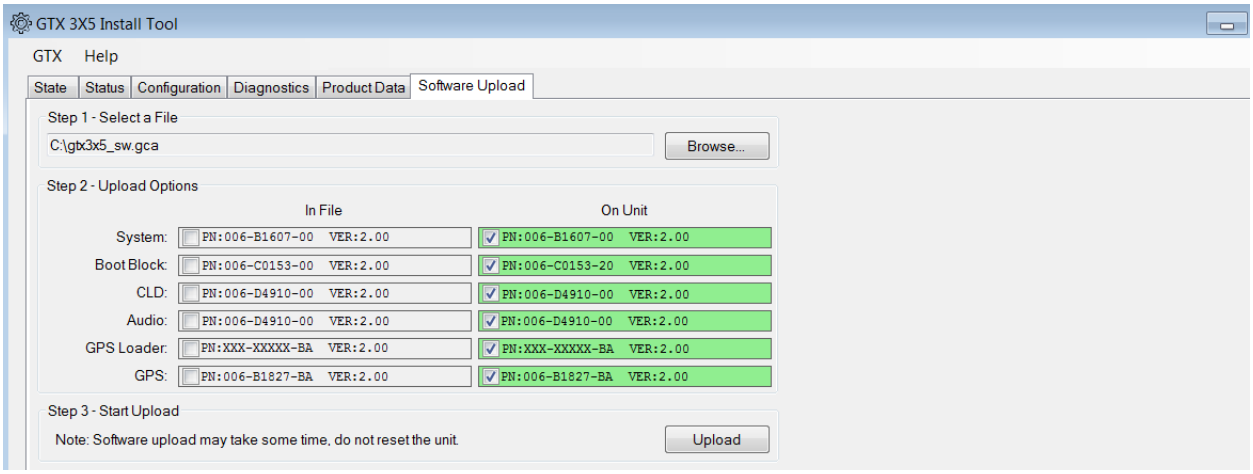

Figure 6-5 GTX 3X5 Install Tool Software Upload Page

After the update is completed, verify the correct software versions and part numbers display on the ***Transponder*** page under the Product Data group. If any software items did not load, select those items and attempt upload again.

6.2.2 GTX 3X5 Software Version Check

1. Start in Normal mode.
2. Observe the start-up screen until “PRESS ENT FOR PRODUCT DATA” is displayed.

Figure 6-6 GTX 3X5 Start-Up Screen

3. Push the **ENT** key for the software version screen.
4. Ensure the version number matches the approved version as specified in *GTX 33X and GTX 3X5 ADS-B AML STC Equipment List*.

Figure 6-7 GTX 3X5 Product Data Page

6.2.3 GTX 3X5R Software Version Check Interfaced with G950/G1000

Follow the steps to verify GTX 3X5R software version is correct when interfaced with specific v15.XX and earlier G950/G1000. Refer to the applicable G1000 series pilot's guides or installation manuals for more information.

1. On the G950/G1000 PFD, start the unit in Configuration mode.
2. On the ***System Status*** page, scroll to GTX LRU.
3. Verify the GTX software version number.
4. Verify the version number and the approved version match in the *GTX 33X and GTX 3X5 ADS-B AML STC Equipment List*.

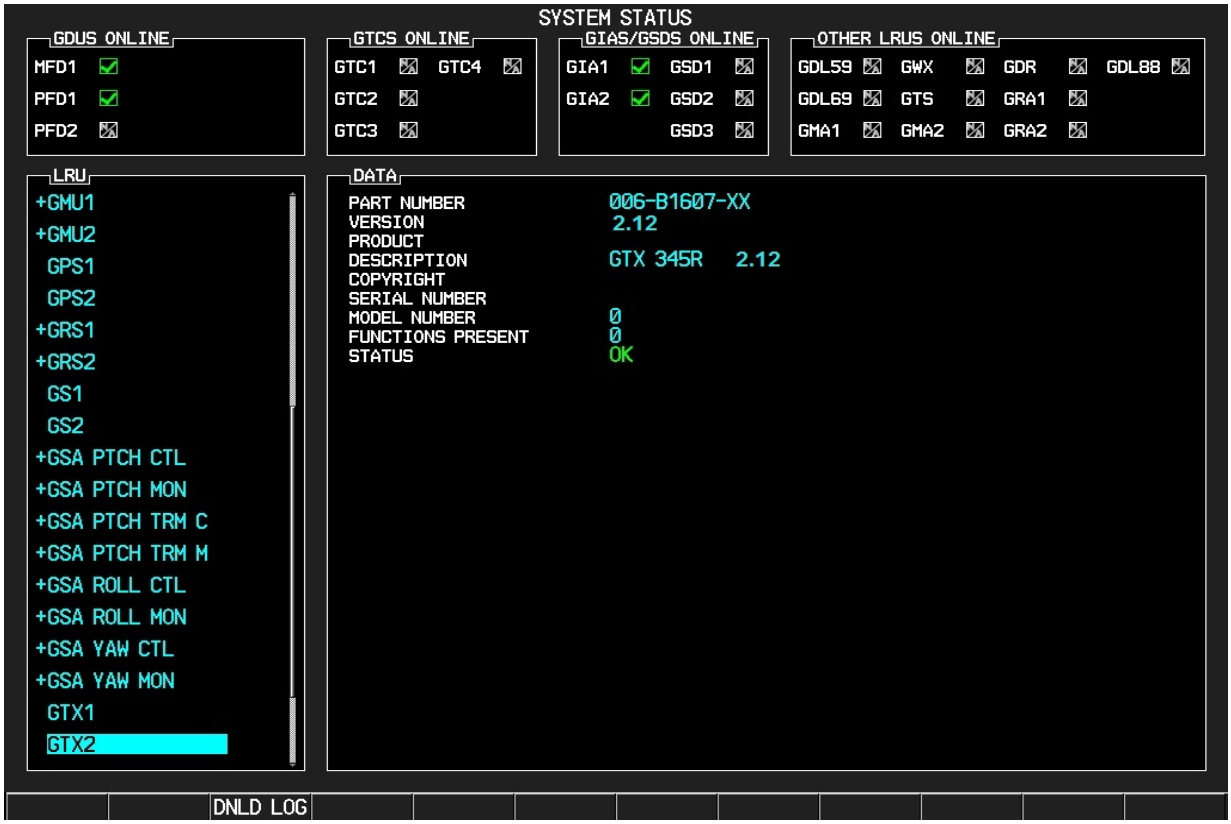

Figure 6-8 Specific G950/G1000 System Status Page

6.2.4 GTX 3X5 Software Version Check Interfaced with GTN 6XX/7XX

Refer to the GTN 6XX/7XX series Pilot's Guides for more information.

1. Push the **External LRUs** key on the ***GTN 6XX/7XX System*** page.
2. Observe the reported GTX software version number.
3. Ensure the version number identified is correct as specified in the *GTX 33X and GTX 3X5 ADS-B AML STC Equipment List*.

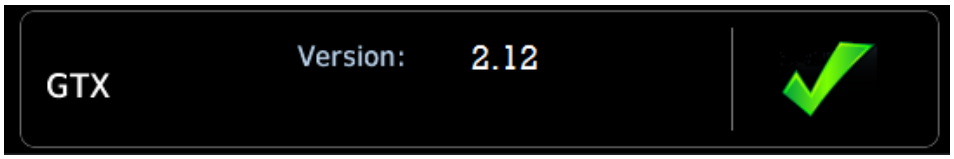

Figure 6-9 GTN 6XX/7XX System Page

7 POST-INSTALLATION CONFIGURATION

7.1 System Inspection and Configuration Overview 7-2
7.2 GTX 3X5 Panel Mount Configuration 7-4
7.2.1 Audio Settings 7-4
7.2.2 Input/Output Configuration 7-6
7.2.3 Unit Settings 7-12
7.2.4 Display Pages 7-13
7.2.5 Sensors 7-14
7.2.6 ADS-B / Airframe 7-20
7.2.7 Antenna (Diversity Units Only) 7-22
7.2.8 Aircraft 7-23
7.2.9 Diagnostics 7-23
7.3 GTX 3X5 Remote Configuration 7-24
7.3.1 Audio Configuration Page 7-25
7.3.2 Interface Configuration Pages 7-26
7.3.3 Unit Configuration Page 7-28
7.3.4 Display Configuration Page 7-29
7.3.5 Sensor Configuration 7-30
7.3.6 Airframe Configuration Page 7-32
7.3.7 Aircraft Configuration Page 7-32
7.4 GTX 3X5 Configuration with G950/G1000 7-33
7.4.1 GTX 335R Configuration 7-34
7.4.2 Active Traffic System De-Configuration with G950/G1000 7-38
7.4.3 GTX 345R Configuration 7-43
7.4.4 Dual Transponder Configuration 7-48
7.5 GTX 33/330 Configuration 7-53
7.5.1 Configuration Menu Page 7-54
7.5.2 Audio Mode Pages 7-54
7.5.3 Traffic Messages Page 7-55
7.5.4 Display Mode Page 7-56
7.5.5 Display Backlight Page 7-56
7.5.6 Key Lighting Page 7-57
7.5.7 Contrast Configuration Page 7-59
7.5.8 VFR Key Configuration Page 7-59
7.5.9 ARINC 429 Configuration Pages 7-60
7.5.10 RS-232 Input and Output Page 7-62
7.5.11 Operation Configuration Pages 7-64
7.5.12 Temperature Page 7-66
7.5.13 Mode S Address Entry Pages 7-66
7.5.14 US Tail and Hex Address Entry Pages 7-67
7.5.15 Mode S Flight ID Pages 7-68
7.5.16 GPS Configuration Page 7-69
7.5.17 Mode S Aircraft Type Page 7-69
7.5.18 Aircraft Size Page 7-70
7.5.19 ADS-B Page 7-71
7.5.20 EHS Page 7-71

7.1 System Inspection and Configuration Overview

This section contains instructions for configuring each installation. Save the configuration file when a GTX 335(R) is replaced by a GTX 345(R) or when a GTX 345(R) is replaced by a GTX 335(R).

1. Under the GTX tab on the Install Tool, select **Configuration**, then **Save**.
2. Once saved, under that same tab, select **Reset**.
3. Reload the saved configuration.
4. Once complete, the unit can continue configuration.

The checkout log contained in Appendix A of *GTX 33X and GTX 3X5 ADS-B Maintenance Manual* (P/N 190-00734-11) must be filled out during the checkout procedures. The completed checkout log sheet must be maintained with the aircraft permanent records to document the configuration of the installation.

For checkout procedures to verify the system is correctly installed and functioning, refer to Section 8. For specific configuration items, refer to Appendix C. The required GTX configurations are as follows:

1. Complete the installation checks in accordance with Section 7.1.
2. Configure the GTX 3X5 in accordance with Section 7.2 and Section 7.3.
3. For G950/G1000, configure the GTX 3X5 in accordance with Section 7.4.
4. Configure the GTX 33/330 in accordance with Section 7.5.
5. Configure the GTX interfacing LRUs in accordance with Appendix C.
6. Complete the post-installation checks in Section 8 to verify that the systems function as intended.
7. Complete the configuration and checkout log in Section 9.2.1.
8. Update the aircraft documentation; refer to Section 9.

Mounting, Wiring, and Power Checks

CAUTION

Do not insert the GTX into the mounting rack without verifying that no pins are misaligned or bent. Bent or misaligned pins will result in damage to the GTX or failed procedures.

CAUTION

Do not power on the GTX for the first time without verifying all lighting buses are set to their lowest adjustment. The lowest adjustment prevents damage to the unit in case of any wiring errors. Incorrect lighting bus wiring could cause damage to the GTX.

NOTE

Verify the wire harness does not touch any moving parts.

The wiring harness must be examined for correct connections to the aircraft systems and other avionics equipment before the unit is installed and powered on.

Point-to-point continuity must be completed to expose any faults, such as shorting to ground or wiring discrepancies. All faults or discrepancies must be corrected before proceeding.

Before and during the installation, verify:

1. All cables are secured.
2. Shields are connected to shield blocks of connectors.
3. Movement of flight and engine controls do not interfere with cabling and control systems.
4. Wire is installed as described in Section 5.

After the installation and continuity, verify items are completed:

1. Power and ground check.
2. Faults and discrepancies are corrected.
3. GTX installation rack and unit are correctly secured.

7.2 GTX 3X5 Panel Mount Configuration

System and interface settings are shown in Configuration mode specific to the GTX 3X5 installation. The configuration settings are stored in internal memory. The configuration settings are also stored in the external configuration module, if installed. The GAE module operates as a configuration module.
GTX 3X5 panel mount units are configurable from the display or the GTX 3X5 Install Tool. Refer to Section 7.3 to configure GTX 3X5 panel mount units with the GTX 3X5 Install Tool.

- Push and hold **ENT** then apply power for Configuration mode
- Push and hold **OFF** until the unit powers off to exit Configuration mode
- Push **FUNC** to cycle through pages
- Push **8** or **9** key to scroll up or down on page without an active field selected
- Push **CRSR** to access items on page
- Push **8** or **9** key to cycle through selections of an item
- Push **ENT** to move within page with a field highlighted
- Push **CLR** to move to previous selection on page
- Push **FUNC** to exit page

7.2.1 Audio Settings

This sets the audio output, volume, and alert type.

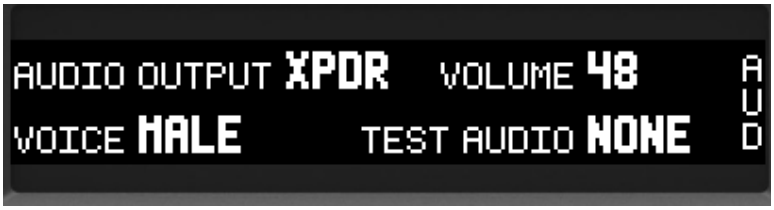

Figure 7-1 Audio Page 1

Set the GTX 3X5 audio settings per the following table:

Table 7-1 Panel Mount Audio Settings

Item	Configuration	Notes
Audio output	XPDR	Use the audio output of the transponder
Volume	50	Use the **8** or **9** keys to adjust volume. The interface checkout procedure in Section 8.1.2 must be performed to verify the volume is configured to an appropriate level
Voice	MALE or FEMALE	Setting can vary for user preference. Default is MALE
Test audio [1]	NONE	Default
	TONE	Solid beep
	MSG 1	“Leaving Altitude”
	MSG 2	“Timer Expired”
	MSG 3	“Traffic 12 O'clock 5 Miles”

Notes:

[1] The test audio files are only used to assist while setting the appropriate volume level of the transponder; once complete, the unit automatically defaults back to *NONE*.

Altitude and Timer Expired Alert (Panel Mount Units Only)

Figure 7-2 Audio Page 2

Set the GTX 3X5 Altitude and Timer Expired Alert settings per the following table:

Table 7-2 Panel Mount Altitude and Timer Expired Alert Settings

Item	Configuration	Notes
ALTITUDE ALRT	OFF	Setting can vary for user preference
	MESSAGE	
	MESSAGE W/ CHIME	
TIMER EXPIRED ALRT	OFF	Setting can vary for user preference
	MESSAGE	
	MESSAGE W/ CHIME	

Traffic Alert

Figure 7-3 Audio Page 3

Set the GTX 3X5 Traffic Alert per the following table:

Table 7-3 Panel Mount Traffic Alert Settings

Item	Configuration	Notes
TRAFFIC ALERT	OFF	Setting can vary for user preference
	MESSAGE	
	MESSAGE W/ CHIME [1]	

Notes:

[1] Only available on GTX 335.

~~7.2.2 Input/Output Configuration~~

This configures the inputs and outputs of the RS-232, ARINC 429, discrete, and HSDB interfaces.

RS-232

Figure 7-4 RS-232 Interface Page

This sets the RS-232 interfaces for input and output formats for channels 1 through 4.

Table 7-4 RS-232 Channel Selections

Selection	Input/ Output	Available Channels	Description	Notes
Off	I/O	1-4	No information is transmitted or received.	
ADC FMT 1	INPUT	1-3	Supports Shadin G/S/Z ADC formats.	
ADS-B+ FMT 1	I/O	1-3	Receives/transmits ADS-B GPS data at 9600 baud.	[3]
ADS-B+ FMT 2	I/O	1-3	Receives/transmits ADS-B GPS data at 38400 baud.	[3]
ALT FMT 1	OUTPUT	1-3	Outputs pressure altitude in 25 or 100 ft resolution depending on the resolution of the source data.	
ALT FMT 1 25 ft	INPUT	1-3	Supports Sandia/Icarus/ACK/TRANS-CAL altitude format with 25 ft or lower encoding.	
ALT FMT 1 100 ft	INPUT	1-3	Supports Sandia/Icarus/ACK/TRANS-CAL altitude format with a parallel Gray code source of 100 ft encoding.	
ALT FMT 3 25 ft	INPUT	1-3	Supports Shadin altitude format with 25 ft or lower encoding.	
ALT FMT 3 100 ft	INPUT	1-3	Supports Shadin altitude format with a parallel Gray code source or 100 ft encoding.	
CONNEXT FMT 1	I/O	1-4	Supports G3X for ADS-B In traffic and FIS-B.	[2]
CONNEXT FMT 3	INPUT	1-4	Supports input from a Flight Stream 110/210.	[2]
CONNEXT FMT 4	I/O	1-4	Supports G3X for ADS-B In traffic and FIS-B.	[2] [5]
GNS	I/O	1-4	Supports GNS 400W/500W series ADS-B In weather (traffic supported over ARINC 429). Also provides GPS data.	
LGCY REMOTE 1	I/O	1-3	Supports transponder interface to specific v15.xx and earlier G950/G1000.	
LGCY REMOTE 2	I/O	1-3	Supports transponder interface and TIS-A traffic to specific v15.xx and earlier G950/G1000.	[1]
LGCY TRAFFIC	OUTPUT	1-4	Supports GDL 90 traffic interface to specific v15.xx and earlier G950/G1000.	[2]
MX FMT 1	OUTPUT	1-4	Supports output to an RS-232 to RS-422 converter for GMX200 or G950/G1000 of GDL-90 FIS-B data.	[2]
REMOTE FMT 1	I/O	1-3	Supports transponder interface to GTN, GNS 480, and G950/G1000 SW v15.XX.	

Selection	Input/ Output	Available Channels	Description	Notes
REMOTE FMT 2	I/O	1-3	Supports transponder interface and TIS-A traffic to GTN, GNS 480, and G950/G1000 SW v15.XX.	[1]
TRAFFIC FMT 4	I/O	4	Supports Ryan TCAD.	[2]
Transponder Control Format 4	I/O	1-3	Supports transponder control interface to a CTL-92.	[4]

Notes:

[1] Applicable for GTX 335 installations only.

[2] Applicable for GTX 345 installations only.

[3] GTX 3X5 unit with internal GPS required for output.

[4] Requires a Transponder Control Field Enablement. The enablement code must be purchased from a Garmin Dealer. For additional information, refer to *GTX 3X5 Transponder Control Enablement Guide* (P/N 190-01499-22).

[5] CONNEXT FMT 4 is identical to FMT 1, except baud rate is 115,200. Available in software v2.60 and later.

RS-422 Output (GTX 345 Only)

Figure 7-5 RS-422 Output Page

RS-422 supports ADS-B In weather to a specific v15.XX and earlier G950/G1000 installations and to Garmin MX20/GMX 200 displays.

Table 7-5 RS-422 Output Selections

Selection	Input/Output	Description	Notes
Off	OUTPUT	Information is not transmitted	
CONNEXT FMT 3	OUTPUT	Supports output to Flight Stream 110/210	
MX FMT 1	OUTPUT	Supports GMX 200	
MX FMT 1	OUTPUT	Supports G950/G1000	[1]
MX FMT 2	OUTPUT	Supports MX20	
Transponder Control Format 4	OUTPUT	Supports transponder control interface to a CTL-92	[2]

Notes:

[1] With this STC, the format is supported only for G950/G1000 installations for ADS-B In traffic. Requires GDU software v12.00 or later and GIA software v6.20 or later.

[2] Requires a Transponder Control Field Enablement. The enablement code must be purchased from a Garmin Dealer. For additional information, refer to *GTX 3X5 Transponder Control Enablement Guide* (P/N 190-01499-22).

ARINC 429 INPUT

NOTE

All ARINC 429 configuration formats are available on all channels/ports.

Figure 7-6 A429 In Page

Table 7-6 ARINC 429 Inputs

Selection	Description	Notes
OFF	Information is not received.	
AHRS	Receives heading, roll, pitch, and yaw information from systems with AHRS.	
ADC	Receives altitude, airspeed, and altitude rate information from air data systems.	
EFIS AIR DATA	Receives altitude, airspeed, altitude rate, and heading information from EFIS and ADC systems.	
Transponder Control FORMAT 1	Receives transponder control information from a third-party controller.	[1]
HEADING	Receives heading information.	
RADIO ALTITUDE	Receives radar altitude information.	
TRAFFIC 1	Receives traffic information from Garmin GTS 8XX systems.	[2]
TRAFFIC 2	Receives traffic information from L-3 Comm SKY497 Skywatch and SKY899 Skywatch HP.	[2]
TRAFFIC 5	Receives traffic information from KTA 870 (KTA 810), KTA 970 (KTA 910), KMH 880 (KMH 820), and KMH 980 (KMH 920).	[2]

Notes:

[1] Requires a Transponder Control Field Enablement. The enablement code must be purchased from a Garmin Dealer. For additional information, refer to *GTX 3X5 Transponder Control Enablement Guide* (P/N 190-01499-22).

[2] Applicable to GTX 345 installations only.

ARINC 429 OUTPUT

Figure 7-7 A429 Output Page

Table 7-7 ARINC 429 Outputs

Selection	Description	Notes
OFF	Information is not transmitted.	
FORMAT 1	Supports the transponder control interface to a third-party controller.	[3]
FORMAT 4	Garmin TAS and GPS data.	
FORMAT 5	Garmin concentrator, Garmin TAS, and GPS data.	
FORMAT 7	Garmin concentrator, Mode S control panel, Garmin TAS, and GPS data. Used for Gables interface.	
~~FORMAT 8~~	~~Garmin TIS-A.~~	~~[1]~~
~~TRAFFIC~~	~~ADS-B traffic output for GNS 400W/500W series units.~~	~~[2]~~

Notes:

~~[1] Applicable for GTX 335 installations only.~~

~~[2] Applicable for GTX 345 installations only.~~

[3] Requires a Transponder Control Field Enablement. The enablement code must be purchased from a Garmin Dealer. For additional information, refer to *GTX 3X5 Transponder Control Enablement Guide* (P/N 190-01499-22).

HSDB Interface (GTX 345 Only)

This sets the presence of specific HSDB devices interfaced to the GTX 345. Selections are *YES* or *NO*.

Figure 7-8 HSDB Interface Page

Table 7-8 HSDB Formats

Selection	Description	Notes
G500/G600	Select *YES* or *NO* for each selection depending on whether or not the interface is included in the particular installation.	
Navigator		
GTS		
GMC 605		
SFD		

Discrete In

Set the function of each configurable discrete as necessary for the installation. Refer to Section 10 for pinout information.

Any discrete input or output designated as "configurable" can be configured for any available configurable discrete input/output, unless specified otherwise. The source priority is based on selections made during configuration. Refer to Section 3.6. Any unused discrete should be set to *Unassigned*.

Figure 7-9 Discrete In Page

Table 7-9 Discrete Input Configuration

Function	Selection	Description
AIR DATA	NONE	Switches between two ARINC 429 ADC sources or two EFIS ADC sources. Source 1 and 2 are set during configuration. Source 1 is used when the discrete is open and Source 2 is used when the discrete is grounded.
	P3251 - 58	
ALT DATA	NONE	Selects between two pressure altitude sources.
	Configurable	
AUD MUTE	NONE	Incoming audio will be muted until discrete is opened. This is connected to a high priority audio such as TAWS.
	Configurable	
AUD CNCL	NONE	When this discrete is grounded by a momentary switch, audio alerts are canceled.
	P3251 - 37	
GILLHAM	ENABLED: No	Activates all ten Gillham/Gray code inputs. If this configuration is set to *Enabled: No*, then these discrete pins are available to be configured for another function that is configurable.
	ENABLED: Yes (P3251 - 10-13; 32-34; 53-55)	
ID SLCT	NONE	Selects the system ID and overrides configuration setting. *GTX 1 system ID* is selected when this discrete is open. *GTX 2 system ID* is selected when the discrete is grounded.
	Configurable [1]	
IDENT	NONE	When this discrete is grounded by a momentary switch, the SPI activates.
	P3251 - 36	
STANDBY	NONE	When this discrete is grounded, the unit will go into Standby mode.
	P3251 - 14	
SQUAT	NONE	This input determines the on-ground status of the aircraft. It is Active-Low, and a ground on this input can be configured to mean On Ground or In Air.
	P3251 - 57	
TIS-A SELECT	NONE	**GTX 335 only:** When this discrete is momentarily grounded, TIS-A will toggle between Operate/ Standby.
	Configurable	
Traffic Audio Mute	NONE	Mutes traffic aural messages without affecting other aural messages (timer, altitude, etc.).
	Configurable	

Function	Selection	Description
Traffic Audio Cancel	NONE	Cancels traffic aural messages without affecting other aural messages (timer, altitude, etc.).
	Configurable	
Mode A/C Lock	NONE	Locks transponder into Mode A/C and stops ADS-B Out transmission. [2]
	Configurable	

Notes:

[1] Only available for configurable discrete outputs on P3251.

[2] Requires a feature enablement. Refer to Section 2.2.7 for more information.

Discrete Out

Figure 7-10 Discrete Out Page

Table 7-10 Discrete Output Configuration

Function	Selection	Description
ADS-B Out Function Fail	NONE	Active when the ADS-B position source input has failed. Active status can be configured as either Open or Ground to indicate failure.
	Configurable	
ALT ALERT	NONE	When this discrete is grounded, it indicates a deviation from the preset altitude setting.
	Configurable	
EQUIP STS	NONE	If the unit needs service soon, this discrete will switch between open and ground for the first 30 seconds after power-up. If after 30 seconds, there is no detection of ADS-B In/Out failures, the discrete opens. The discrete will ground if any ADS-B In/Out failures are detected after 30 seconds.
	Configurable	
FAIL 1	NONE	Failure of transponder causes discrete to ground.
	P3251 - 17	
FAIL 2	NONE	Failure of transponder causes discrete to open.
	Configurable	
RPLY ACTV	NONE	Discrete grounds when transponder is replying to interrogations.
	Configurable	
Standby Alert	NONE	Active when the selected transponder in a dual installation is in Standby mode.
	Configurable	
TCAD SL	NONE	Supports automatic control and integration with Ryan TCAD, Avidyne TAS600 and L-3 Skywatch Series traffic systems. Applicable to GTX 345 installations only.
	Configurable	
TRFC STBY	NONE	Commands TAS/TCAS Standby/Operate. Discrete output operation automatically set through TAS/TCAS Input Configuration. **Applies to GTX 345 only.**
	Configurable [1]	
TRFC TEST	NONE	Commands TAS/TCAS into Test mode. **Applies to GTX 345 only.**
	Configurable [1]	
TRFC ALRT	NONE	When a traffic alert is active, this discrete will ground. **Applies to GTX 345 only.** Used for external traffic annunciator lamp.
	Configurable	

Function	Selection	Description
Mode A/C Lock	NONE	Discrete grounds when the transponder Mode A/C Lock is enabled (ADS-B Out transmission inhibited). [2]
	Configurable	

Notes:

[1] Only available for configurable discrete outputs on P3251.

[2] Requires feature enablement. Refer to Section 2.2.7 for more information.

~~7.2.3 Unit Settings~~

Figure 7-11 Unit Page

~~Set the GTX 3X5 UNIT settings per the following table~~:

Table 7-11 Panel Mount Unit Settings

Item	Configuration	Notes
FIS-B PROCESSING	ENABLED	Set to *ENABLED* for GTX 345 units for ADS-B weather data.
	DISABLED	
ALTITUDE UNITS	FLIGHT LVL	Sets both pressure and density altitude units. Setting can vary for user preference.
	FEET	
	METERS	
TEMPERATURE UNITS	CELSIUS	Setting can vary for user preference.
	FAHRENHEIT	
INSTALLATION ID [1]	1	Set as 1 for primary unit; if dual transponders installed, set as 2 for second unit.
	2	
VFR ID	1200	Range in octal is 0000-7777. Default is 1200.
ALTITUDE ALERT DEVIATION	Configurable Range is 200 ft to 999 ft	This field determines the altitude offset from selected altitude to generate an altitude alert. This field is applicable only if the Altitude Alert configuration parameter is selected on the ***Audio Configuration*** page.
RESTORE PAGES ON POWER-UP	NO	Select *YES* to save the selected pages set in normal operating mode as the new default page settings next time the unit is powered on.
	YES	
BLUETOOTH	ENABLED	**GTX 345 units only:** Set to *DISABLE* if interfacing to a Flight Stream 110/210 or 510.
	DISABLED	
FLASH MESSAGE INDICATOR	YES	Select *YES* to allow the “MSG” indicator to flash when new messages annunciate. *YES* is the only approved configuration under this STC.

Notes:

[1] The “ID SLCT” discrete overwrites the configuration setting.

~~7.2.4 Display Pages~~

NOTE

Under night conditions, verify the brightness levels match the lighting levels of other equipment in the panel.

Figure 7-12 Display Pages

Set the GTX 3X5 DISPLAY settings to the following table:

Table 7-12 Panel Mount Display Settings

Item	Configuration	Notes
DISPLAY BACKLIGHT	PHOTCELL [1] LIGHTING BUS [2]	Sets the source for the display backlight control and adjustment.
MINIMUM LEVEL	Range is: 0 - 100 [3]	Sets the minimum brightness of the display. The higher the number, the brighter the minimum brightness. Recommended minimum level should not be below 5.
KEYPAD BACKLIGHT	PHOTCELL [1] LIGHTING BUS [2]	Sets the source for the keypad backlight control and adjustment.
MINIMUM LEVEL	Range is: 0 - 100 [3]	Sets the minimum brightness of the keypad. The higher the number, the brighter the minimum brightness. Recommended minimum level should not be below 5.
PHOTOCELL TRANSITION	Range is: 5 - 50 [3] Default is: 5	Sets a point on the lighting bus. When the lighting bus is below this point, the GTX uses the photocell to adjust the display brightness.
SLOPE	Range is: 0 - 100 [3] Default is: 50	Sets the sensitivity of the photocell input level. Adjusting the slope higher results in a greater display brightness change for a given increase in photocell input level.
OFFSET	Range is: 0 - 100 [3] Default is: 50	Adjusts the lighting level up or down for any given photocell input level. Use the offset settings to match lighting curves with other installed equipment in the panel.
LIGHTING BUS INPUT VLTG	5 VAC 5 VDC 14 VDC 28 VDC	Select the lighting bus voltage input used.
DISPLAY AND BEZEL KEY LIGHTING SLOPE	Range is 0 - 100 [3] Default is 50	Adjusts the sensitivity of the display or bezel keys for a given lighting bus input level. Set the slope higher for a brighter display for a given increase in the lighting bus input level.

Item	Configuration	Notes
DISPLAY AND BEZEL KEY LIGHTING OFFSET	Range is 0 - 100 [2] Default is 50	Adjusts lighting level up or down for any given lighting bus input level. Use the offset setting to match lighting curves with other equipment in the panel.
DEFAULT BACKLIGHT OFFSET	Range is -10 to 99 [2] Default is 0	Manually sets the default backlight offset. Setting can vary for user preference.
DEFAULT CONTRAST OFFSET	Range is -50 to 50 [2] Default is 0	Manually sets the default contrast offset. Setting can vary for user preference.

Notes:

[1] Lighting level is selected by ambient lighting.

[2] Lighting level is selected by lighting bus input.

[3] Blackout flight deck (e.g., blanket) to simulate night conditions to determine preferred lighting level.

~~7.2.5 Sensors~~

OAT Sensor Installed

Select *NO* for OAT INSTALLED. Discrete interface to an external OAT probe is not covered under this STC.

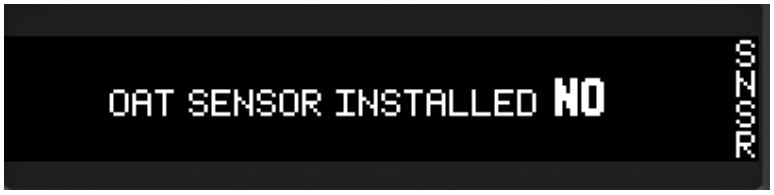

Figure 7-13 Sensor Page

Altitude Source 1 and 2

NOTE

Altitude sources do not need to be set. The GTX uses both altitude sources if set to None. If no altitude sources are selected, the GTX will use any altitude source in priority order.

~~Set the GTX 3X5 primary and secondary altitude sources per the following table:~~

Table 7-13 Primary and Secondary Panel Mount Altitude Source Settings

Item	Configuration	Notes
ALTITUDE SOURCE 1 and ALTITUDE SOURCE 2 [1]	NONE	This setting will allow the GTX to chose the best source based on the integrity of the input data.
	RS232 1	Select if Altitude input is from RS232 port 1.
	RS232 2	Select if Altitude input is from RS232 port 2.
	RS232 3	Select if Altitude input is from RS232 port 3.
	A429 1	Select if Altitude input is from ARINC 429 port 1.
	A429 2	Select if Altitude input is from ARINC 429 port 2.
	HSDB	Select if using GTN HSDB (GTX 345 only).
	GILLHAM	Select if Gillham Gray code is used.
	ALT ENC	Select if GAE is used.

Notes:

[1] Sets the secondary altitude source.

GPS 1 and 2

Set the GTX 3X5 primary and secondary GPS settings per the following table:

Table 7-14 Primary and Secondary Panel Mount GPS Source

Item	Configuration	Notes
GPS 1 SRC and GPS 2 SRC [1]	NONE	A GPS source is required.
	INTRNL	Select if GTX 3X5 with GPS is used.
	RS232 1	Select if GPS input is from RS232 port 1.
	RS232 2	Select if GPS input is from RS232 port 2.
	RS232 3	Select if GPS input is from RS232 port 3.
	RS232 4 [3]	Select if GPS input is from RS232 port 4.
	A429 1	Not supported on this STC.
	A429 2	Not supported on this STC.
	Navigator 1 [2] [3]	Select if using GTN/GNC 355/GPS 175 #1 HSDB.
	Navigator 2 [2] [3]	Select if using GTN/GNC 355/GPS 175 #2 HSDB.
	GIA 1 [3]	Not supported on this STC.
	GIA 2 [3]	Not supported on this STC.
INTGRTY [4]	UNK	NOT USED - Not ADS-B Out Compliant.
	1E-3	NOT USED - Not ADS-B Out Compliant.
	1E-5	NOT USED - Not ADS-B Out Compliant.
	1E-7	Select for ADS-B Out Compliance and G950/G1000.
	AUTO	Select if using a Garmin Navigator. Not the internal GPS source or G950/G1000.
LAT OFST [4]	Range is: -6 mt to 6 mt (Increments of 2 mt)	Installer must measure to determine an accurate GPS Antenna Offset from the Datum. *UNK is not an approved option.*
LON OFST [4]	Range is: 2 mt to 60 mt (Increments of 2 mt)	Installer must measure to determine an accurate GPS Antenna Offset from the Datum. *UNK is not an approved option.*

Notes:

[1] Sets the secondary GPS source.

[2] Verify the GTN selection matches the correct GTN GPS source.

[3] GTX 345 only.

[4] There are separate configuration settings for GPS 1 and GPS 2.

Internal Alt Encoder

A minimum of three test points is required for calibration.

Figure 7-14 Internal Alt Encoder

Table 7-15 Panel Mount Alt Encoder Settings

Item	Configuration	Notes
INSTALLED	GAE-12	Select *GAE-12* if a GAE is installed; otherwise, select *NONE*.
	NONE	
CEILING	Range is: 8000 feet to 30,000 feet	Select aircraft Maximum Operating Altitude. *GAE is only rated to 30,000 feet.*
TEST POINTS	Range is: 3 to 20 [1]	A minimum of three test points are required. These values are used to calibrate the GAE. Calibration is required prior to flight. [2]

Notes:

[1] The maximum number of test points is limited by the aircraft ceiling setting.

[2] If there is an inaccuracy during the altitude checks, recalibration with additional test points is required.

Internal Alt Encoder Adjustment

Figure 7-15 Internal Alt Encoder Adjustment

Set the GAE module altitude to match the primary altitude display.

1. Connect a pitot/static test set to the aircraft. Use the pitot/static test set and, if applicable, the aircraft altimeter for altitude verification.
2. With the initial test point selected, run the pitot/static system to the selected TEST ALT value.
3. Once the pitot/static test set stabilizes at the TEST ALT value, push the **ENT** key on the panel to select the CORRECTION value.
4. Change the CORRECTION value using the **8** or **9** key until the MEASURED value indicates the TEST ALT value.
5. Once the CORRECTION value is set, push the **ENT** key to go back to the TEST ALT selection.
6. Select the next TEST ALT test point and change the pitot/static test set to match the TEST ALT value. Run to that altitude.
7. Continue to calibrate the GAE using steps 2 through 6 until all test points identified.
8. Once all test points are successfully completed, push the **CRSR** key to exit.

~~**If using the GTX 3X5 Install Tool:**~~

1. With a pitot/static test set connected, select the ***GAE*** tab under the ***Sensor*** tab in the Configuration section.
2. On the Installed option, select the **GAE-12**.
3. Select the appropriate ceiling based on the aircraft's maximum operating altitude.
4. Select a minimum of three Point Counts.
5. Select the **Set** key.
6. Adjust the pitot/static test set to match the first altitude test point.
7. Once the Pitot/static altitude matches the Point Altitude, select the **Start** key under the automatic adjustment.
8. Once the correction value is stable and the measured altitude box turns green, select **Continue**.
9. Adjust the pitot/static test set to match the next altitude test point.
10. Once the pitot/static test set matches the test point, select **Continue**.
11. Once the correction value is stable and the measured value turns green, select **Continue**.
12. Continue to calibrate the GAE using steps 9 through 11 until the calibration is complete.

~~*Internal AHRS Orientation (GTX 345 Only)*~~

NOTE

The aircraft must be leveled in accordance with the aircraft manufacturer's instructions before measuring the yaw orientation and performing the offset calibration.

Before accurate attitude and heading information can be provided, the GTX 345 internal AHRS must have the installed vent and connector orientations set and have the pitch and roll offsets calibrated.

The installed vent and connector orientations must be set before setting the Yaw offset. Set the GTX 345 internal AHRS per the following table:

Table 7-16 Internal AHRS Settings

Item	Configuration	Notes
CONNECTORS	UNKNOWN	Select which orientation the GTX 345 connectors are in reference to the direction of flight. For a drawing of vent and connectors, refer to Appendix A.
	R WING	
	L WING	
	UP	
	DOWN	
	FORWARD	
	AFT	
VENT	UNKNOWN	Select which orientation the GTX 345 vent is in reference to the direction of flight. For a drawing of vent and connectors, refer to Appendix A.
	R WING	
	L WING	
	UP	
	DOWN	
	FORWARD	
	AFT	
YAW	-30° to 30°	Enter the YAW orientation of the GTX 345 unit in reference to the aircraft center line. Refer to Figure 7-16 for yaw orientation measurement instructions. [1]
OFFSETS [2]	CALIBRATE	Verify aircraft is level in accordance with the aircraft manufacturer's instructions. Once all orientation items are entered, push the **ENT** key to calibrate unit or select **Calibrate** in the Install Tool.

Notes:

[1] The Yaw measurement is taken from any side of the GTX (i.e. top, side, bottom, front, back) that is within ±30 degrees of the aircraft centerline. Only one side of the unit is within either +30 degrees or -30 degrees of the aircraft centerline. Entering the connector and vent orientation to direction of flight allows the GTX 345 to automatically determine which side of the unit the Yaw is being measured from in order to properly compensate for the offset.

[2] The unit installation must be within ±30 degrees of the selected configuration direction for "Connectors" and "Vent" to successfully calibrate, except for the "Vent: Left" and "Connectors: Forward/Down" configuration, which must be within ±50 degrees pitch.

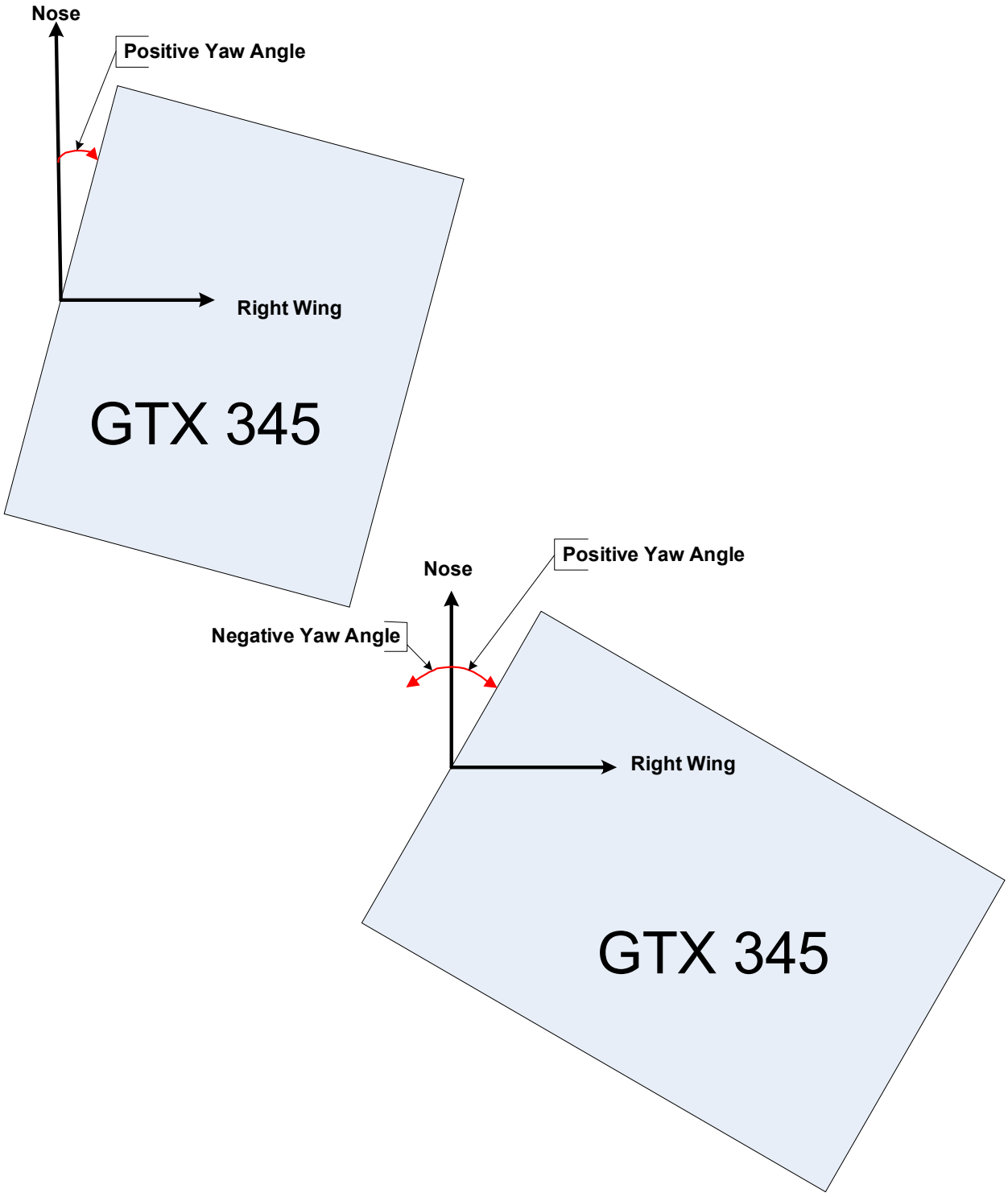

Figure 7-16 Yaw Orientation Measurements

~~7.2.6 ADS-B / Airframe~~

NOTE

When a portable ADS-B In receiver system (e.g., GDL 39) is in use, both 1090ES and UAT In settings can be set to YES.

Table 7-17 Panel Mount GTX 3X5 ADS-B Settings

Item	Configuration	Notes
ACRFT CATGY	UNKNOWN	Select the appropriate aircraft category in accordance with the aircraft type data *(Unknown should not be selected in accordance with the STC).*
	LIGHT	
	SMALL	
	HIGH PERFORMANCE	
	ROTORCRAFT	
	GLIDER	
	LIGHTER-THAN-AIR	
	ULTRALIGHT	
	UAV	
ACFT MAX A/S	UNKNOWN	Select the appropriate aircraft maximum airspeed in accordance with the aircraft type data *(Unknown should not be selected in accordance with the STC).*
	<=75 kt	
	<=150 kt	
	<=300 kt	
	<=600 kt	
	<=1200 kt	
	>1200 kt	
ACFT STALL METHOD	Unspecified	Select the desired method for determining aircraft stall speed. Select *Unspecified* if the specific aircraft stall speed is not wanted or known.
	MANUAL	
ACFT STALL SPEED	30kt to 200kt	Select the appropriate aircraft stall speed in accordance with the aircraft type data when *Manual* is selected for ACFT STALL METHOD.
AIRCRAFT LENGTH	UNKNOWN	Select the appropriate aircraft length in accordance with the aircraft type data *(Unknown should not be selected in accordance with the STC).*
	<=15 meters	
	<=25 meters	
	<=35 meters	
	<=45 meters	
	<=55 meters	
	<=65 meters	
	<=75 meters	
	<=85 meters	
	>85 meters	

Item	Configuration	Notes
AIRCRAFT WIDTH	UNKNOWN	Select the appropriate aircraft length in accordance with the aircraft type data *(Unknown should not be selected in accordance with the STC).*
	<=23.0 meters	
	<=28.5 meters	
	<=33.0 meters	
	<=34.0 meters	
	<=38.0 meters	
	<=39.5 meters	
	<=45.0 meters	
	<=52.0 meters	
	<=59.0 meters	
	<=67.0 meters	
	<=72.5 meters	
	<=80.0 meters	
	>80.0 meters	
1090ES OUT CONTROL	DISABLED	Sets 1090ES ADS-B transmission function. Select *ENABLED* or *PILOT SET*. [1]
	ENABLED	
	PILOT SET	
UAT OUT RMT CONTROL	N/A	This function is not supported on the STC.
1090ES IN CAPABLE	NO	Determines if the aircraft can receive 1090ES ADS-B messages. Select *YES* for GTX 345 units.
	YES	Select *YES* when a portable ADS-B In receiver system (e.g., GDL 39) is in use.
UAT IN CAPABLE	NO	Determines if the aircraft can receive UAT ADS-B messages. Select *YES* for GTX 345 units.
	YES	Select *YES* when a portable ADS-B In receiver system (e.g., GDL 39) is in use.
ADS-B IN PROCESSING	DISABLED	**GTX 345 units only.**
	ENABLED	Select *ENABLED*.
	Enabled when Selected Transponder	The GTX behaves the same as in the “Enabled” setting, but will only be the selected ADS-B In source when also selected as the active transponder.

Notes:

[1] For G950/G1000 installations with GDU software prior to v9.10, this must be set to *Enabled*. For all other G950/G1000 installations with GDU software later than v9.10, *Enabled* or *Pilot Set* are acceptable.

~~7.2.7 Antenna (Diversity Units Only)~~

Configures losses for the top and bottom antennas, as well as enables or disables non-diversity mode.

NOTE

Optimum performance is achieved when the top and bottom antenna coax cables loss matches. This ensures the unit meets the DO-181E antenna selection criteria.

Top Antenna Cable Loss

Configures top antenna cable loss in decibels.

- 0 dB
- 0.25 dB
- 0.50 dB
- 0.75 dB
- 1.00 dB
- 1.25 dB
- 1.50 dB
- 1.75 dB
- 2.00 dB

Bottom Antenna Cable Loss

Configures bottom antenna cable loss in decibels.

- 0 dB
- 0.25 dB
- 0.50 dB
- 0.75 dB
- 1.00 dB
- 1.25 dB
- 1.50 dB
- 1.75 dB
- 2.00 dB

If the difference between the top and bottom cable loss is 0.5 dB or more, the unit needs to be configured for the loss. Enter the difference in cable loss for the antenna with the higher loss to the nearest 0.25 dB.

Table 7-18 lists the typical difference in cable loss for several cables.

Table 7-18 Cable Loss and Delay

Cable Loss (dB/ft)	Carlisle IT Type	MIL-C-17 Type	RG Type
0.180		M17/128-RG400	RG-400
0.1445	3C142B		
0.155		M17/60-RG142	RG-142
0.120		M17/112-RG304	RG-304
0.088	311601	M17/127-RG393	RG-393
0.0712	311501		
0.0556	311201		
0.0363	310801		

~~7.2.8 Aircraft~~

Table 7-19 GTX 3X5 Panel Mount Aircraft Settings

Item	Configuration	Notes
AIRCRAFT TAIL NUMBER	Enter Aircraft Tail Number	On panel-mount units, use display keys **0**-**9** to enter the alphanumeric aircraft tail number.
ADDRESS [1]	HEX	Sets the ICAO address in octal or hex format. Verify value with aircraft registration records.
	OCTAL	
ALLOW PILOT TO EDIT FLT ID	NO	Setting can vary for user preference. Select *YES* to allow pilot to change flight ID.
	YES	
DEFAULT FLT ID	TAIL	Sets the default flight ID used in Normal mode. Select *TAIL* unless an operational need to change the value is required.
	ENTRY	
FLIGHT ID PREFIX	NONE	Sets the flight ID prefix with the carrier abbreviation (e.g., Garmin AT is GAT). Select *NONE* unless an operational need to change the value is required.
	ENTRY	

Notes:

[1] If the tail number is recognized as a US registered tail number, the ICAO address is automatically filled by the GTX. It only needs to be verified against the aircraft registration records.

~~7.2.9 Diagnostics~~

Figure 7-17 Diagnostics Page

The ***Diagnostics*** page serves as a means for troubleshooting:

- Discrete input state
- Lighting bus voltages
- Photocell voltages
- Outside air temperature
- Display temperature
- RS-232 channels
- ARINC 429 channels
- Gillham input state
- GPS Source 1 and GPS Source 2 status
- HSDB status (GTX 345)

~~7.3 GTX 3X5 Remote Configuration~~

NOTE

Screen shots in this section are example configurations only.

The GTX 3X5 Installation Tool requires Windows XP, Vista, or Windows 7. There is no support for Apple products at this time. Use a PC and the GTX 3X5 Install Tool to configure units without a display. Panel-mount units can also be configured through the Install Tool. Selections for remote mount units are identical to those for panel mount units. Refer to Section 7.2. The latest GTX 3X5 Install Tool (P/N 006-A0271-( )) is available at Garmin's Dealer Resource Center. A USB-A to USB-B cable (not provided) is necessary.

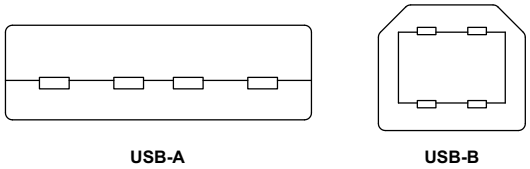

Figure 7-18 USB-A and USB-B Connectors

~~To use the GTX 3X5 Install Tool:~~

1. Power off unit.
2. Connect USB-A to USB-B cable between the computer and USB-B receptacle installed in aircraft wire harness.
3. Power on unit.
4. Launch GTX 3X5 Install Tool.
5. Select ***Configuration*** tab.

~~7.3.1 Audio Configuration Page~~

Select the settings for the configuration parameters included under Audio Options: Output, Volume, and Voice. Test Audio is only used to assist with volume adjustments.

Select the desired settings for the configuration parameters included under Audio Alerts: Timer Expired, Traffic, Altitude Monitor, and Altitude Deviation (if the altitude monitor is enabled).

The Altitude Monitor, Altitude Deviation, and Timer Expired configuration parameters are applicable to panel mount units only. The Altitude Deviation configuration parameter is on the ***Unit Settings*** page on the GTX unit itself (panel mount units).

Refer to Section 7.2.1 for additional guidance on these configuration items approved under this STC.

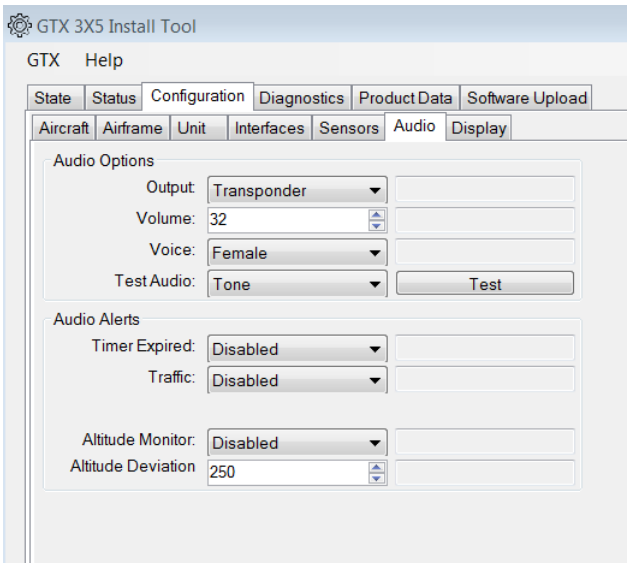

Figure 7-19 Audio Configuration Page

~~7.3.2 Interface Configuration Pages~~

Select the settings for the RS-232, RS-422 (GTX 345 only), ARINC 429, HSDB (GTX 345 only), and Discrete interface configuration parameters.

Refer to Section 7.2.2 for additional guidance on these configuration items approved under this STC.

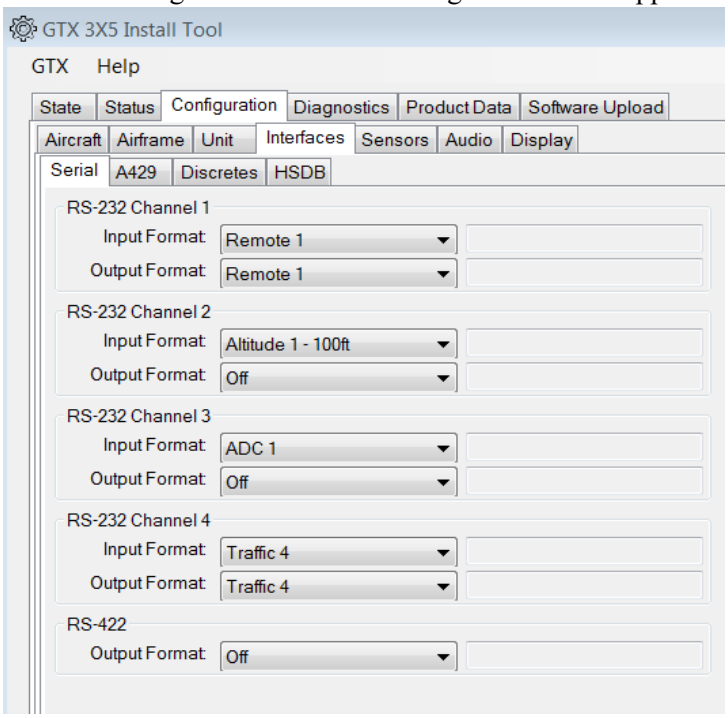

Figure 7-20 Interface Configuration Page (Serial)

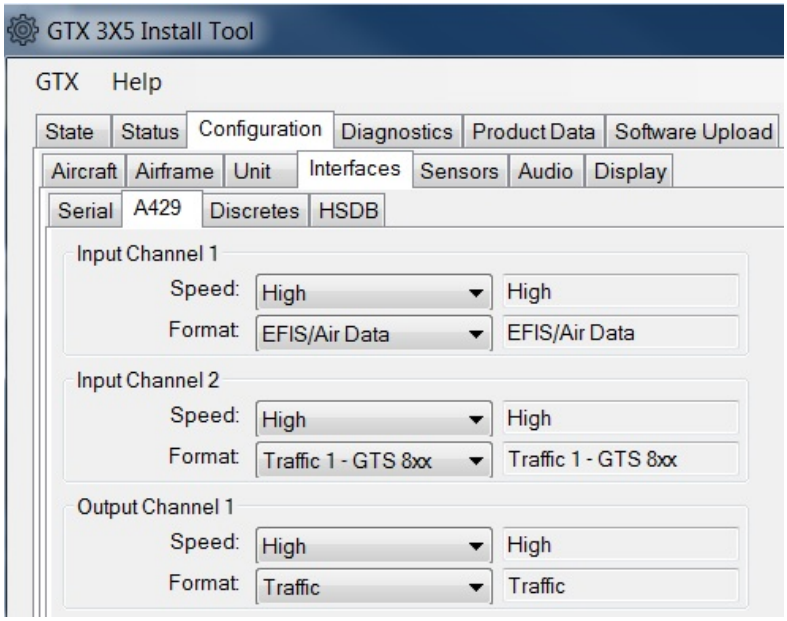

Figure 7-21 Interface Configuration Page (A429)

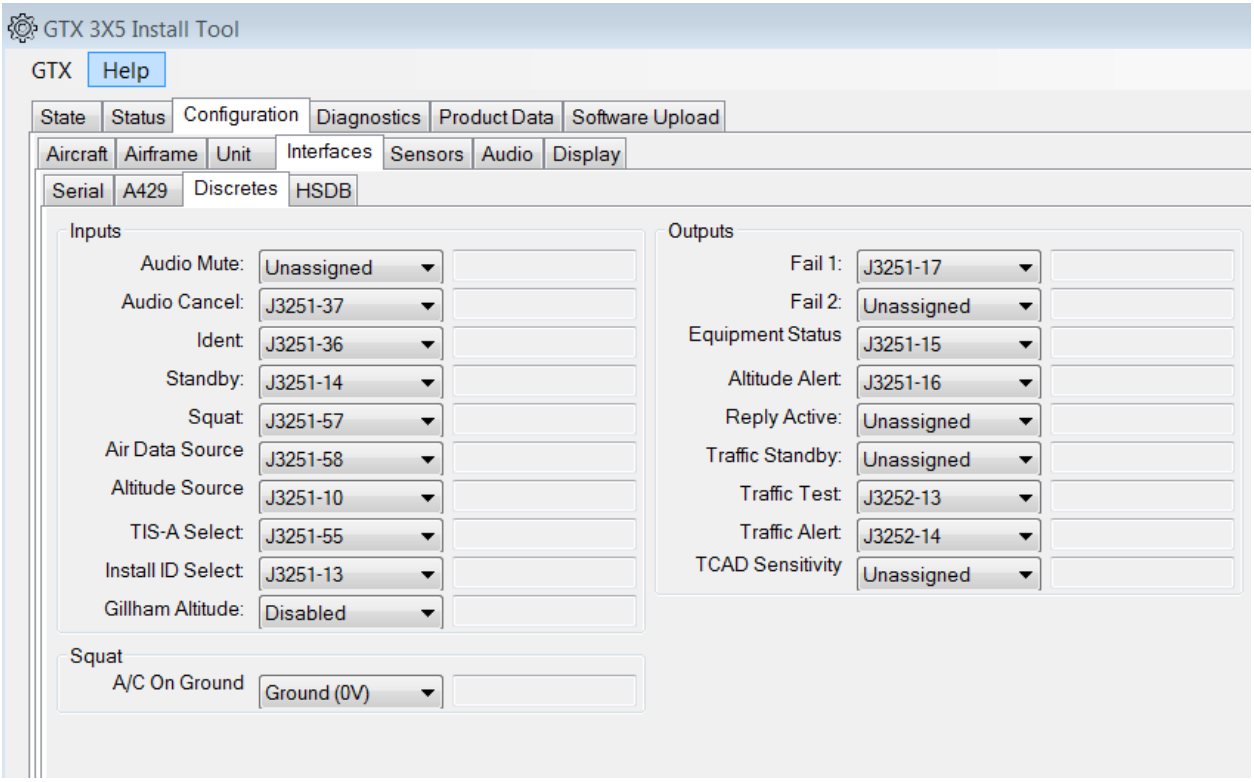

Figure 7-22 Interface Configuration Page (Discrete)

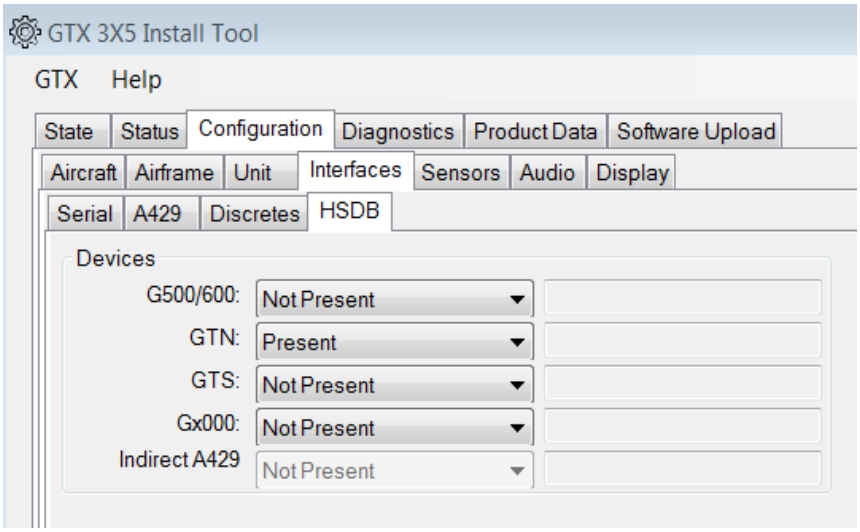

~~**Figure 7-23 Interface Configuration Page (HSDB)**~~

~~7.3.3 Unit Configuration Page~~

Select the settings for the following configuration parameters in the Identification section: VFR Squawk Code and Installation ID.

Select the settings for the following configuration parameters in the Unit Options section: FIS-B and Bluetooth are only valid for the GTX 345 units.

Select the settings for the following configuration parameters in the Display Options section (applicable to panel mount units only): Altitude Units, Temperature Units, and Restore Pages on.

Refer to Section 7.2.3 for additional guidance on these configuration items approved under this STC.

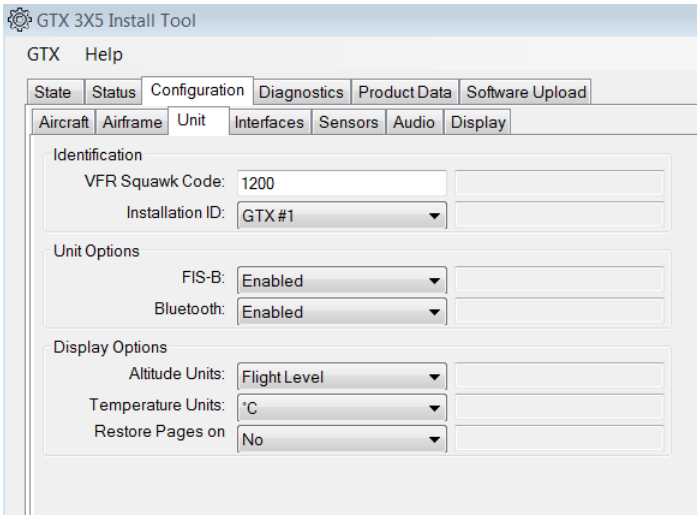

Figure 7-24 Unit Configuration Page

~~7.3.4 Display Configuration Page~~

This section applies to panel mount units only. Select the settings for the following configuration parameters in the Display Backlight section: Source and Minimum Brightness.

Select the settings for the following configuration parameters in the Key Backlight section: Source and Minimum Brightness.

Select the settings for the following configuration parameters in the Photocell Curve section: Slope, Offset, and Transition.

Select the settings for the following configuration parameters in the Lighting Bus Curve section: Slope, Offset, and Bus Type.

Select the settings for the following configuration parameters in the Defaults section: Brightness Offset and Contrast Offset.

Refer to Section 7.2.4 for additional guidance on these configuration items approved under this STC.

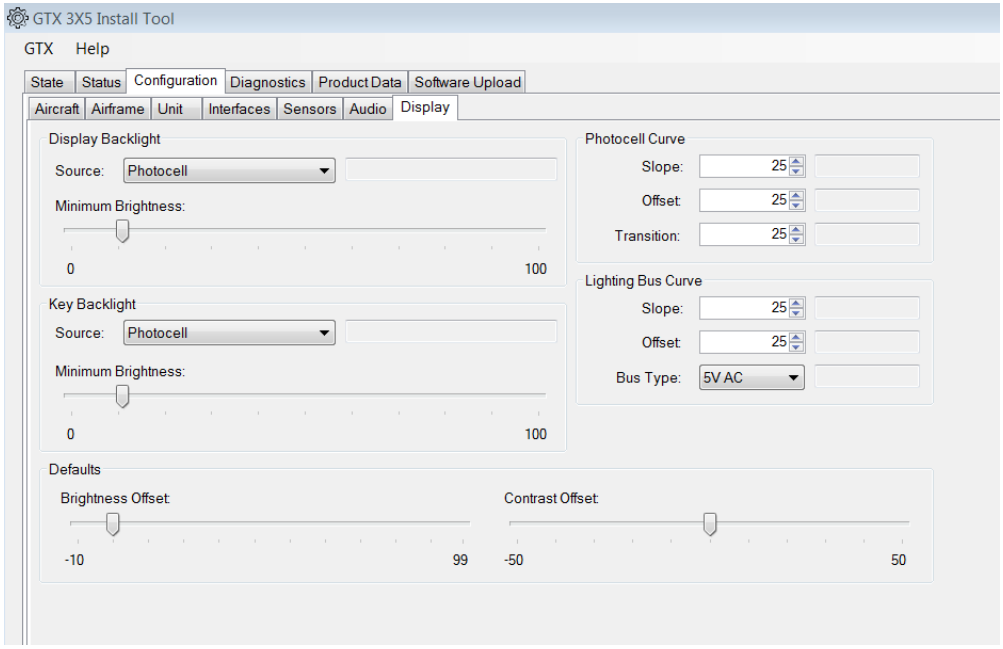

Figure 7-25 Display Configuration Page

~~7.3.5 Sensor Configuration~~

GAE

Refer to Section 7.2.5 for GAE calibration.

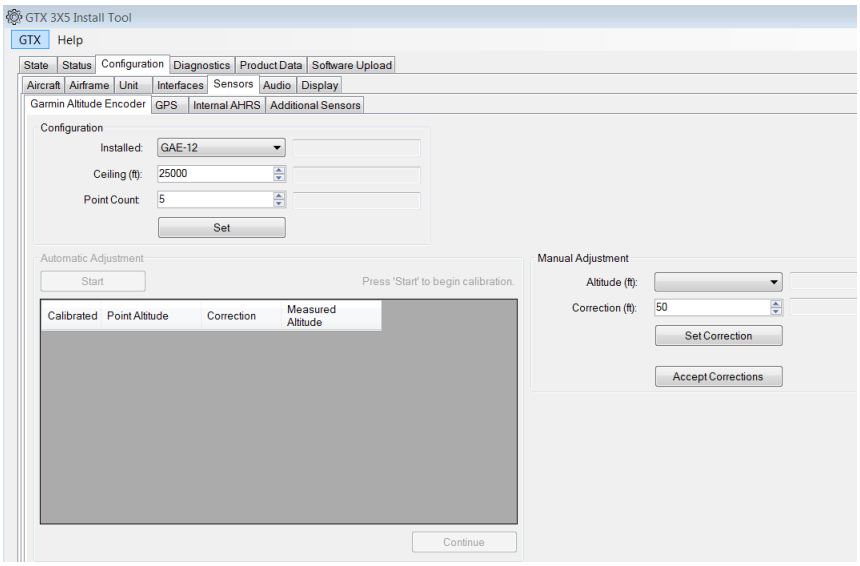

Figure 7-26 Sensor Configuration Page (GAE)

GPS

Select the settings for the following configuration parameters for both GPS 1 and GPS 2, if applicable: Source, Source Integrity Level, Lateral Antenna Offset, Longitudinal Antenna Offset, and System Design Assurance.

The System Design Assurance configuration parameter is not available when configuring a panel mount GTX 3X5 unit through the unit display (automatically set to Level B ($<=10^{-7}$)). Refer to Section 7.2.5 for additional guidance on these configuration items approved under this STC.

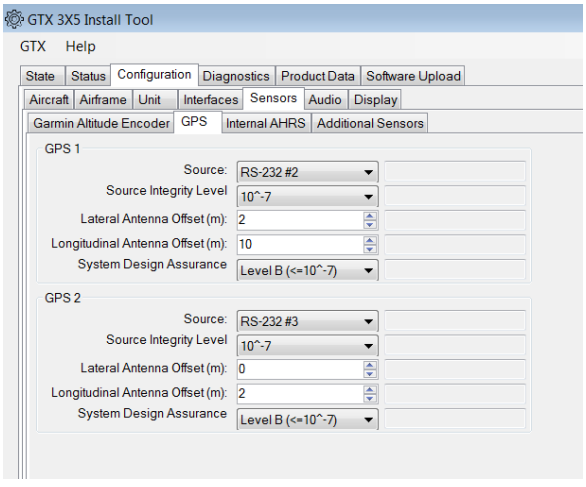

Figure 7-27 Sensor Configuration Page (GPS)

~~*Internal AHRS (GTX 345 Only)*~~

Select the settings for the following configuration parameters in the Orientation section: Connectors, Vent, and Yaw. Once the orientation is set, the internal AHRS can be calibrated via the Offset section.

Refer to Section 7.2.5 for additional guidance on these configuration items approved under this STC and how to calibrate the internal AHRS.

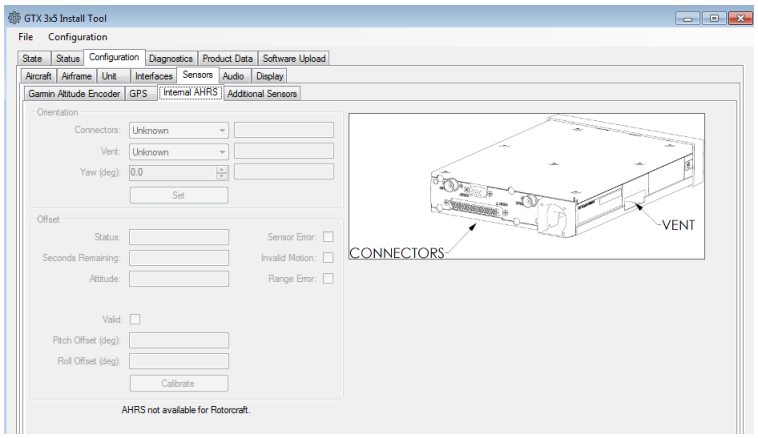

Figure 7-28 Sensor Configuration Page (Internal AHRS)

Additional Sensors

Select the settings for the following configuration parameters in the Altitude Sources section: Primary and Secondary.

This STC does not approve the interface to an external OAT sensor. Additional approval is required. Refer to Section 7.2.5 for additional guidance on these configuration items approved under this STC.

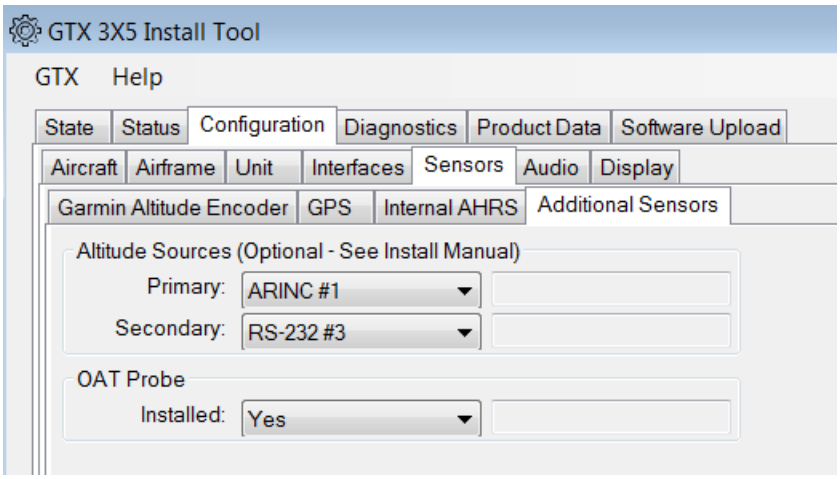

Figure 7-29 Sensor Configuration Page (Additional Sensors)

~~7.3.6 Airframe Configuration Page~~

Select the settings for the following configuration parameters in the Airframe Configuration section: Max Airspeed, Length, Width, Category, and Stall Speed.

Select the settings for the following configuration parameters in the Operational Options section: 1090 ES In Capable, UAT In Capable, 1090 ES Out Control, UAT Out Remote, and ADS-B In Processing.

Refer to Section 7.2.6 for additional guidance on these configuration items approved under this STC.

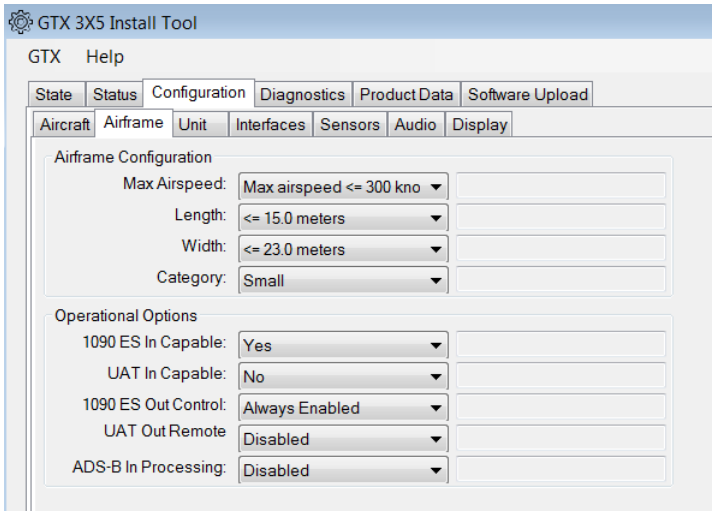

Figure 7-30 Airframe Configuration Page

~~7.3.7 Aircraft Configuration Page~~

Select the settings for the following configuration parameters in the Aircraft Configuration section: Aircraft Registration, ICAO Address Format, and ICAO Address.

Select the settings for the following configuration parameters in the Flight ID section: Allow Pilot Entry, Default Selection, Default (if applicable), Prefix Selection, and Prefix (if applicable).

Refer to Section 7.2.8 for additional guidance on these configuration items approved under this STC.

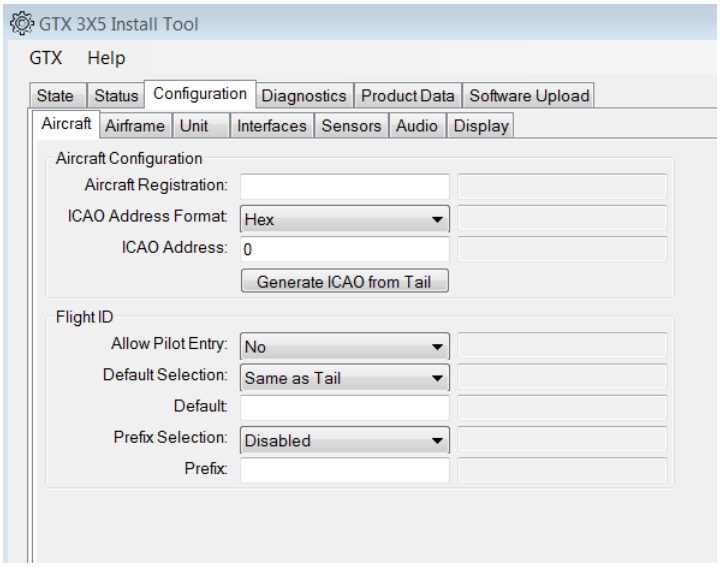

Figure 7-31 Aircraft Configuration Page

7.4 GTX 3X5 Configuration with G950/G1000

This section provides details for configuring the GTX 3X5 with the G950/G1000 integrated flight deck system. Verify the GTX 3X5 unit is configured prior to configuring the G950/G1000 system.

In order for the transponder to relay the additional accuracy and integrity required by AC-20-165( ) Version 2 compliant equipment, the G950/G1000 system must utilize GIA 63W units with a minimum software v6.40.1 and WAAS GPS v5.00 or later.

For specific approved software versions and part numbers, refer to *GTX 33X and GTX 3X5 ADS-B AML STC Equipment List* (P/N 005-00734-05). All other earlier versions of GIA 63(W) are not ADS-B Out compatible and require GTX 335R/345R with Internal GPS units.

By interfacing the GTX 345R with an active traffic system (e.g., GTS, KMH, SKYWATCH, TAS 6XX), the GTX automatically controls the traffic system and removes the pilot control of Standby, Operate, and Test. The GTX 3X5 Install Tool provides these keys for the purpose of testing. This interface removes the TSO-C147/TSO-C118 compliance for an installed TAS/TCAS system (refer to Section 2.2.6). This solution provides an inclusive ADS-B traffic picture with correlation from an Active Traffic system.

The GTX 335 is only approved to interface with the GTS traffic system. G950/G1000 GDU SW v 9.10 and later provide a traffic aural alert mute to the GTX 345 for aural muting below 500ft AGL.

G950/G1000 GDUs with SW versions prior to v9.10 that are installed in an aircraft with retractable gear require the GTX aural cancel discrete to be interfaced to the Landing Gear switch when interfaced to an active traffic system to provide traffic aural muting in an airport environment.

G950/G1000 GDUs with SW versions prior to v9.10 that are installed in fixed gear aircraft without an approved Radar Altitude source interfaced to the GTX 3X5 cannot interface to an installed active traffic system for correlated traffic on the certified display.

NOTE

The steps contained in this section must be completed for each installed transponder.

In addition to a single transponder installation, this STC supports dual GTX 3X5 transponder installations for these aircraft:

- Cessna 208 Caravan
- Cessna Citation C501
- Piper PA-46
- Socata TBM 700/850/900

The dual configuration is limited to GTX 335R as transponder #1 and GTX 345R as transponder #2.

Before aircraft modification, annotate the following system configurations. Enter Configuration mode by holding down the **ENT** key while applying powering to the displays.

Verify that the G950/G1000 software supports the installation of the GTX 3X5R using *GTX 33X and GTX 3X5 ADS-B AML STC Equipment List*.

1. Unused RS-232 Channels for GIA1 and GIA2.
2. Unused ARINC 429 OUT Channels for GIA 1 and GIA2.
3. Unused RS-485 IN and OUT Channels for GIA1 and GIA2.
4. Verify GIA 2 Discrete OUT Annunciate 20* is available.
5. Verify GIA 1 and 2 Discrete OUT Annunciate* 18 is available.

7.4.1 GTX 335R Configuration

This section is for the configuration of a single GTX 335R unit. Configuration items depicted in images will vary depending on aircraft and interfaced LRUs (i.e., shown as an example only).

1. The GTX 335R must be configured prior to configuring the G950/G1000 system.
2. Download the appropriate GTX 3X5 G1000 Interface Card on a 2 GB SD card in accordance with *GTX 33X and GTX 3X5 ADS-B AML STC Equipment List* Rev. 9 (or later).
3. Insert the interface card into the top slot of the PFD.
4. Enter Configuration mode on all displays by holding the **ENT** key while powering on the displays.
5. In the System page group, select the ***System Upload*** subpage.
6. Under AIRFRAME, select the appropriate aircraft model and GDU software version from the drop-down list. Models vary depending on the interface card used.

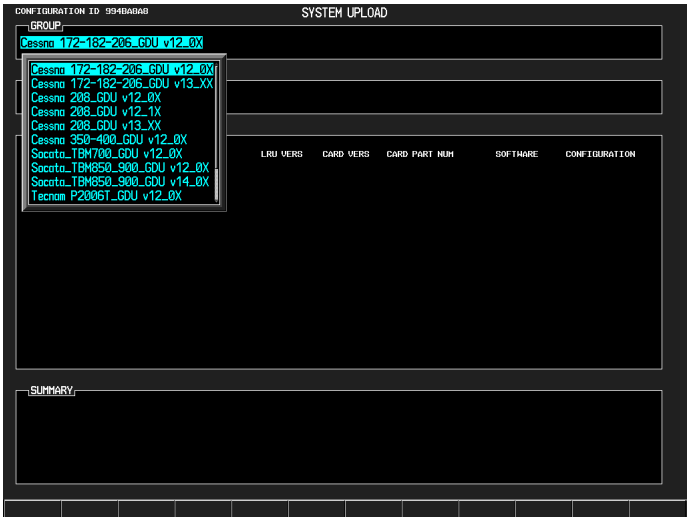

Figure 7-32 GTX 335R System Upload

7. Select the appropriate GTX 335R unit:
   a. For TIS, select **GTX 335 with TIS**.
   b. Without TIS (i.e., an active traffic system is installed), select **GTX 335 without TIS**.

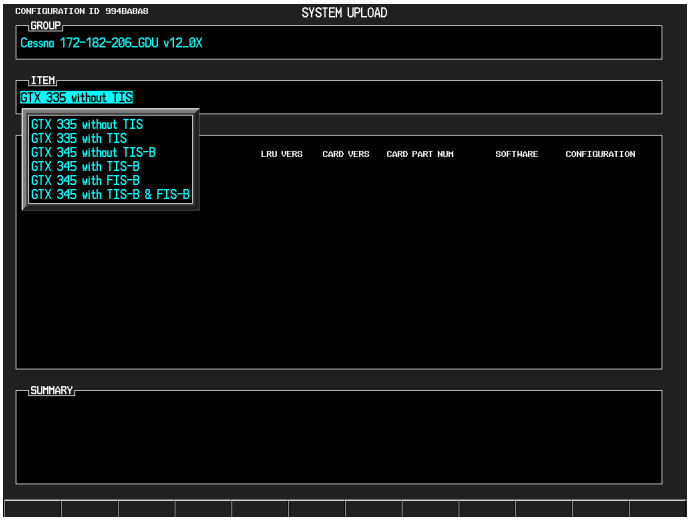

Figure 7-33 GTX 335R System Upload Item

8. Push the **LOAD** soft key.
9. Once the items are loaded, push the **UPDT CFG** soft key.
10. From the ***GIA1*** subpage in the GIA group, select the **ACTV>SET** soft key. “ES” only shows for GDU versions 9.10 and later.

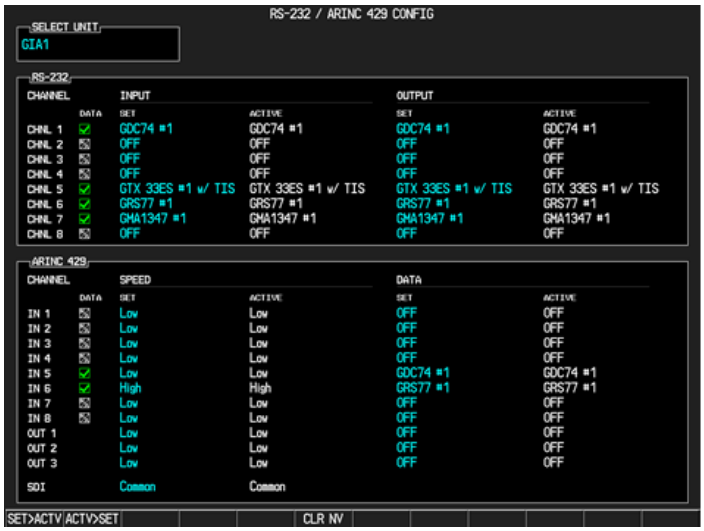

Figure 7-34 GTX 335R GIA 1 RS-232 / ARINC 429 Configuration

11. From the ***GIA2*** subpage in the GIA page group, select the **ACTV>SET** soft key. “ES” only appears for GDU versions 9.10 and later.

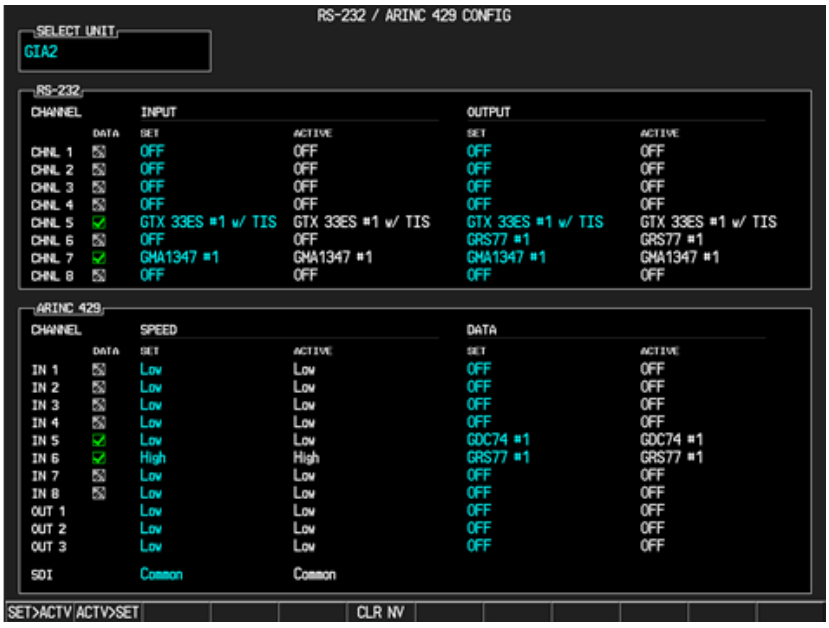

Figure 7-35 GTX 335R GIA 2 RS-232 / ARINC 429 Configuration

12. From the ***XPDR*** page group, select the **ACTV>SET** soft key.

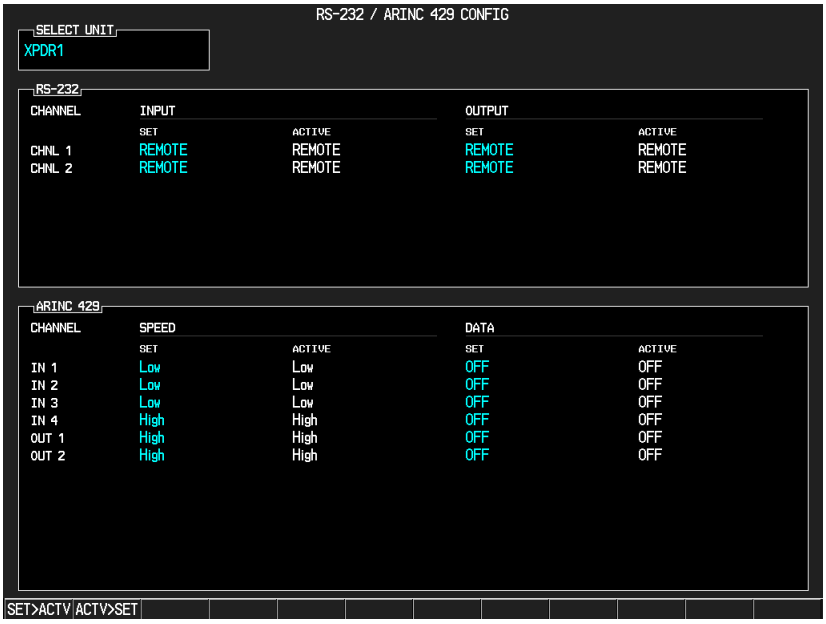

Figure 7-36 GTX 335R XPDR RS-232 / ARINC 429 Configuration

13. From the ***Transponder Configuration*** subpage, select the **ACTV>SET** soft key.

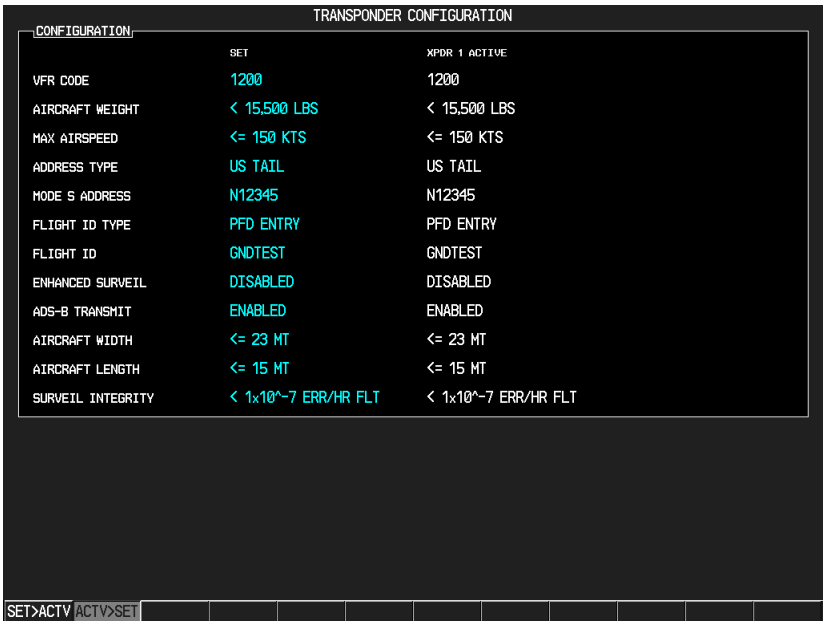

Figure 7-37 GTX 335R XPDR Configuration

14. From the ***System Status*** page in the System page group, verify the system accepted the transponder.
15. If the GTX STATUS is *OK*, put the system into Normal mode by cycling power. Do the remainder of the required transponder checks.

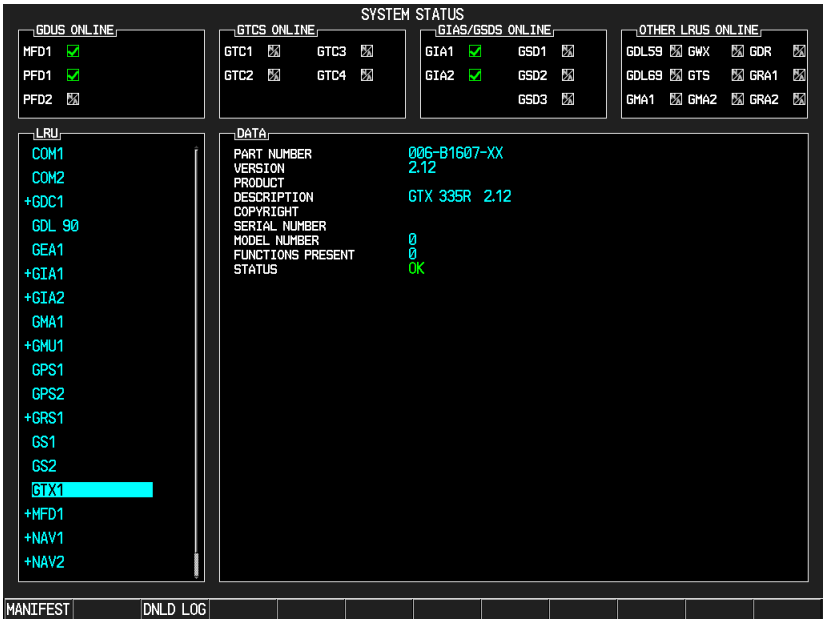

Figure 7-38 GTX 335R System Status

~~7.4.2 Active Traffic System De-Configuration with G950/G1000~~

This section provides details for de-configuring the TAS/TCAS system from the G950/G1000 Integrated Flight Deck system if interfacing to the GTX 345R for correlated traffic.

NOTE

If an active traffic system was previously installed and is interfaced to the GTX 345R for correlated traffic display on the G950/G1000 system, the active traffic system must be de-configured from the G950/G1000 system prior to configuration of the GTX 345R unit.

Table 7-20 Active Traffic Systems

Manufacturer	Active Traffic System	G1000 Interface	Section
Honeywell	KTA 870/970 (810/910) KMH 880/980 (820/920)	ARINC 429	Section 7.4.2.1
L-3 Communication	SkyWatch 497 SkyWatch 899	ARINC 429	Section 7.4.2.1
Avidyne (Ryan)	TAS 6XX (9900BX)	ARINC 429	Section 7.4.2.1
Garmin	GTS 8XX	ARINC 429	Section 7.4.2.1
Garmin	GTS 8XX	HSDB	Section 7.4.2.2

7.4.2.1 ARINC 429 Traffic System De-Configuration

This section is for de-configuring the KTA/KMH, SKYWATCH, TAS 6XX, and GTS 8XX if interfaced to the G950/G1000 system using ARINC 429. Items depicted in images may vary in port configuration depending on aircraft. Use the images as an aid only.

1. On the ***RS-232 / ARINC 429 Config*** page for GIA2, set ARINC 429 Traffic Advisory setting to *OFF*. Refer to Figure 7-39 and Figure 7-40 for configuration and de-configuration information.
   a. Select the ARINC 429 CHANNEL IN port with Traffic Advisory. Change the setting to *OFF*.
2. On the ***GIA I/O Configuration*** page for GIA2, configure the TAS Test Mode and TAS Standby Mode discrete to *OFF*. Refer to Figure 7-41 and Figure 7-42 for configuration and de-configuration information.
   a. Select the DISCRETE OUT CHANNEL with TAS TEST MO DE. Change the setting to *OFF*.
   b. Select the DISCRETE OUT CHANNEL with TAS STANDBY MODE. Change the setting to *OFF*.

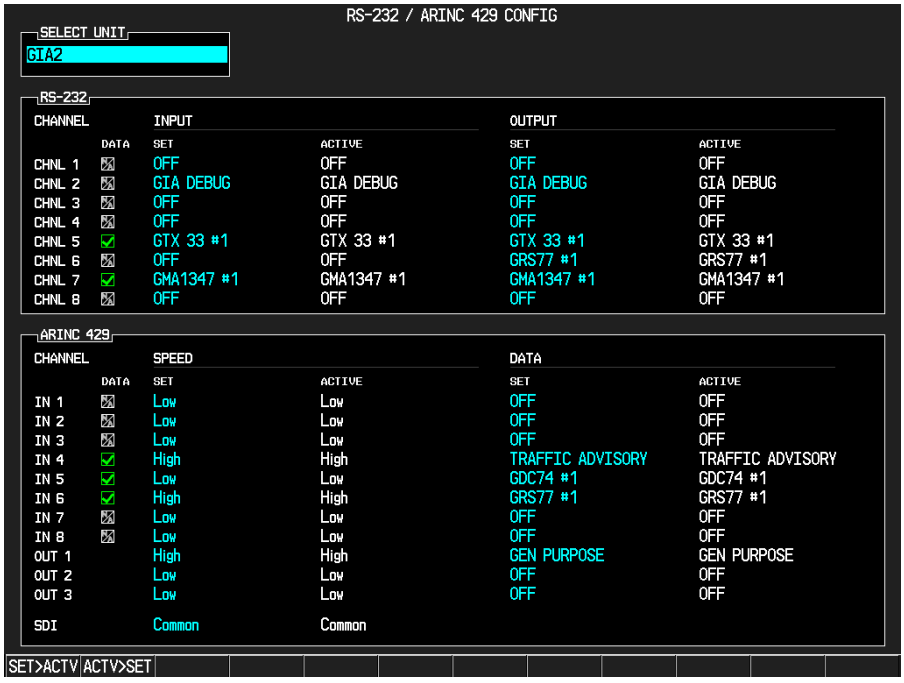

Figure 7-39 RS-232/ARINC 429 CONFIG TAS/TCAS Traffic System Active

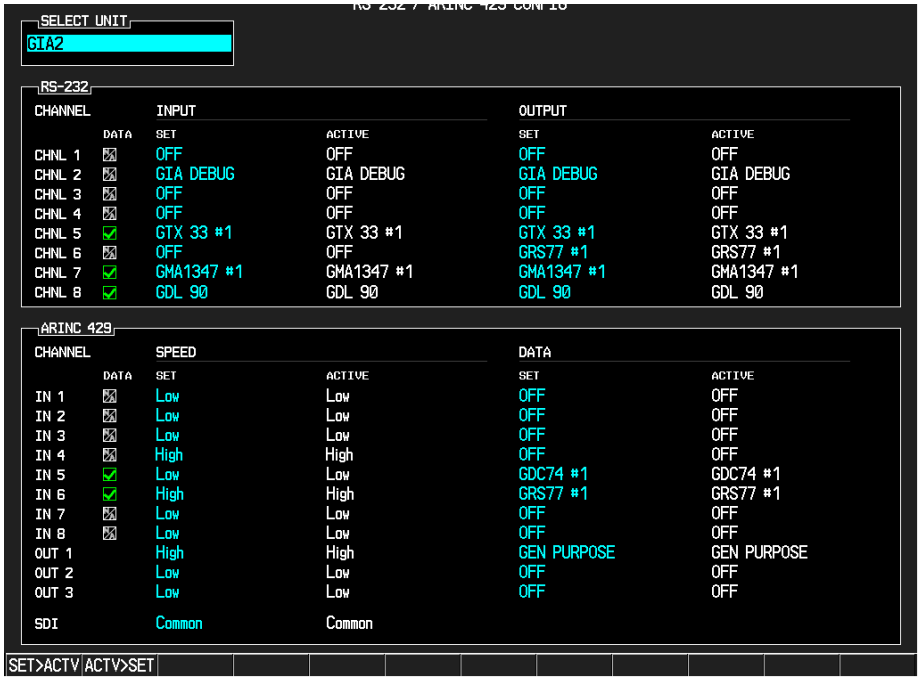

Figure 7-40 RS-232/ARINC 429 CONFIG TAS/TCAS Traffic System Off

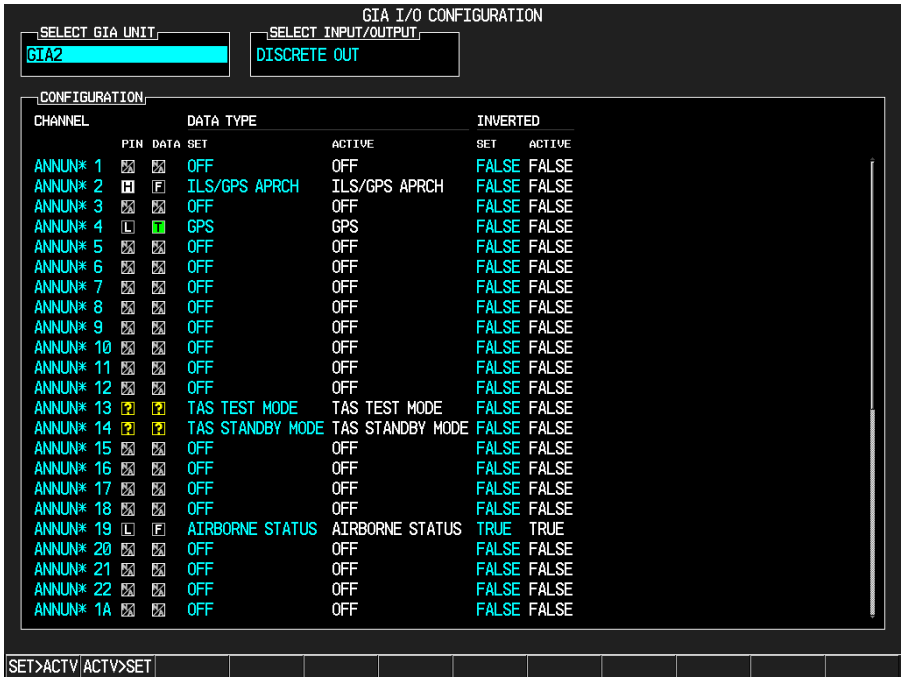

Figure 7-41 GIA2 I/O Configuration TAS/TCAS Mode Discrete Active

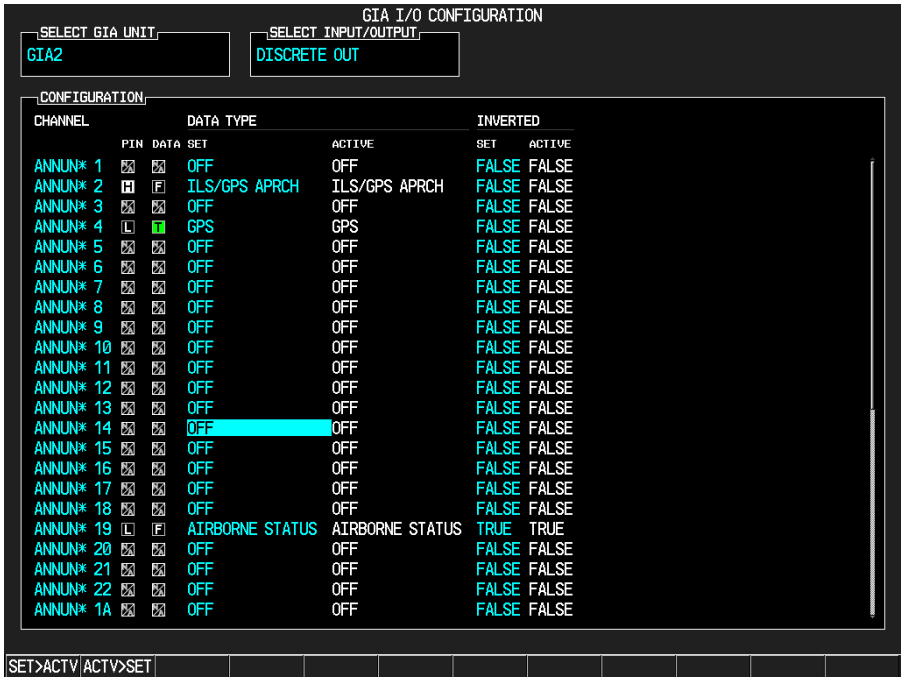

Figure 7-42 GIA2 I/O Configuration TAS/TCAS Mode Discrete Off

~~7.4.2.2 GTS HSDB Traffic System De-Configuration~~

This section describes the de-configuration of the GTS 8XX if interfaced to the G950/G1000 system using HSDB. Items depicted in images may vary in port configuration depending on aircraft. Use the images as an aid only.

In addition to the de-configuration of the GTS from the G1000, a configuration module will be required to be installed with the GTS 8X5 if one is not already present. Refer to the *GTS Processor (GTS 825/855/8000) Installation Manual* (P/N 190-00587-50) for configuration module installation and GTS processor Install Tool instructions.

GTS 825 TAS installations:

1. If not already installed, install a configuration module (Garmin P/N 011-00979-20) (GTS 825 P8001).
2. Using the GTS processor Install Tool, select the **GTS Feature Enablement** key.
3. Select the **GTS TAS Feature**.

GTS 855 TCAS I installations:

1. If not already installed, install a configuration module (Garmin P/N 011-00979-20) (GTS 855 P8001).
2. Using the GTS processor Install Tool, select the **GTS Feature Enablement** key.
3. Select the **GTS TCAS Feature**.
4. Enter the enablement code in the text field.

Contact Garmin Product Support for enablement codes.

GTS 8X0 installations do not require a configuration module.

NOTE

All GTS 8XX units must be configured to use ARINC 429 using the appropriate GTS Install Tool.

NOTE

The HSDB wires must be disconnected between the GTS 8XX and the G1000 prior to the de-configuration of the active traffic system.

1. On the ***System Configuration*** page, uncheck the GTS. Refer to Figure 7-43 for additional information.
2. On the ***System Data Paths*** page for HSDB, uncheck the GTS. Refer to Figure 7-44 for additional information.
3. Verify on the ***Aircraft Configuration*** page that "GTS" no longer appears under LRU Configuration Status. Refer to Figure 7-45 for additional information.

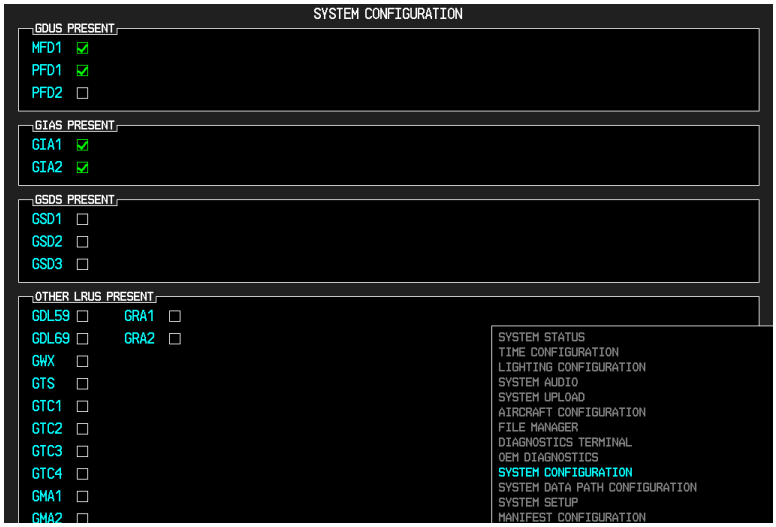

Figure 7-43 System Configuration Unchecked GTS

Figure 7-44 HSDB System Data Paths Unchecked GTS

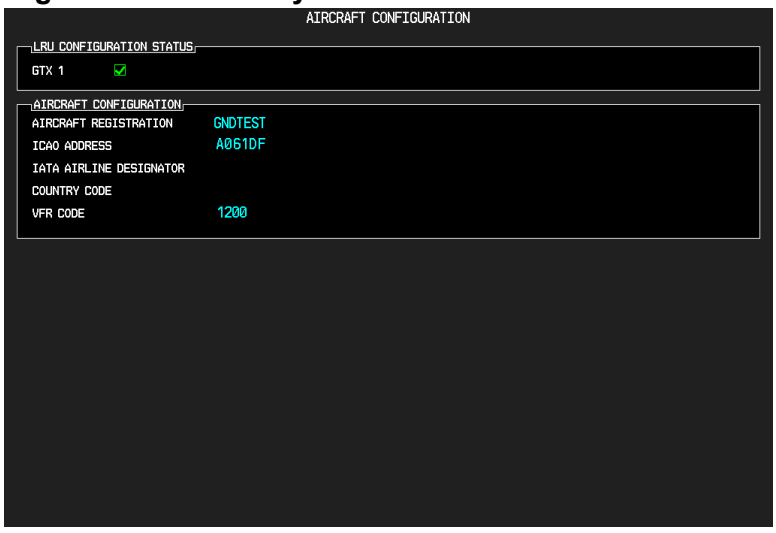

Figure 7-45 Aircraft Configuration

7.4.3 GTX 345R Configuration

This section is for the configuration of a single GTX 345R unit. Configuration items depicted in the following images will vary with the aircraft and interfaced LRUs.

1. The GTX 345R must be configured prior to configuring the G950/G1000 system.
2. Download the appropriate GTX 3X5 G1000 Interface Card on a 2 GB SD card in accordance with P/N 005-00734-05 Rev. 9 (or later).
3. Insert the interface card into the top slot of the PFD.
4. Enter Configuration mode on all displays by holding the **ENT** key while energizing the displays.
5. From the SYS page group, select the ***System Upload*** subpage.
6. Under Airframe, select the appropriate aircraft model and GDU software version from the drop-down list.
7. Select the appropriate GTX 345R unit. Refer to Figure 7-46 for an example.
   a. FIS-B Only: select **GTX 345 with FIS-B**. Select if active traffic system is installed and the user/pilot does not want correlated traffic and wants to maintain pilot control of active traffic system.
   b. TIS-B Only: select **GTX 345 with TIS-B**. Select if FIS-B ports are unavailable. This setting allows for an active traffic interface.
   c. FIS-B and TIS-B: select **GTX 345 with TIS-B & FIS-B**. Select if ADS-B TIS-B traffic and FIS-B weather are desired. This setting allows for an active traffic interface.

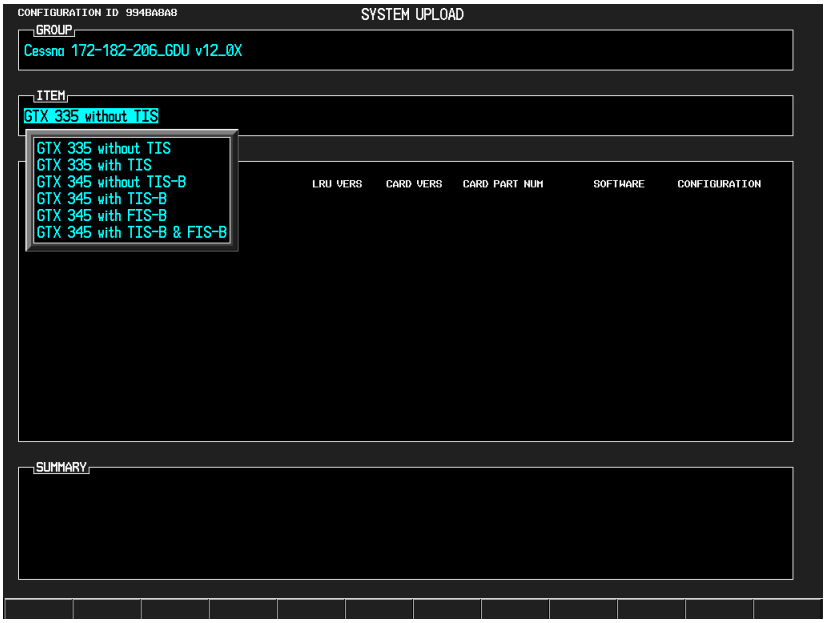

Figure 7-46 GTX 345R System Upload Item

8. Select the **LOAD** soft key.
9. Select the **UPDT CFG** soft key.
10. If TIS-B is connected, configure the appropriate RS-232 Port for *GDL 90* depending on which port is connected. Refer to Figure 7-48 for an example.
11. Configure the appropriate ARINC 429 OUT Port for *GEN PURPOSE* depending on the connected port. Refer to Figure 7-48 for an example.

12. From the ***GIA1*** subpage in the GIA group, push the **ACTV>SET** soft key. Refer to Figure 7-47 for an example. “ES” only appears for GDU versions 9.10 and later.

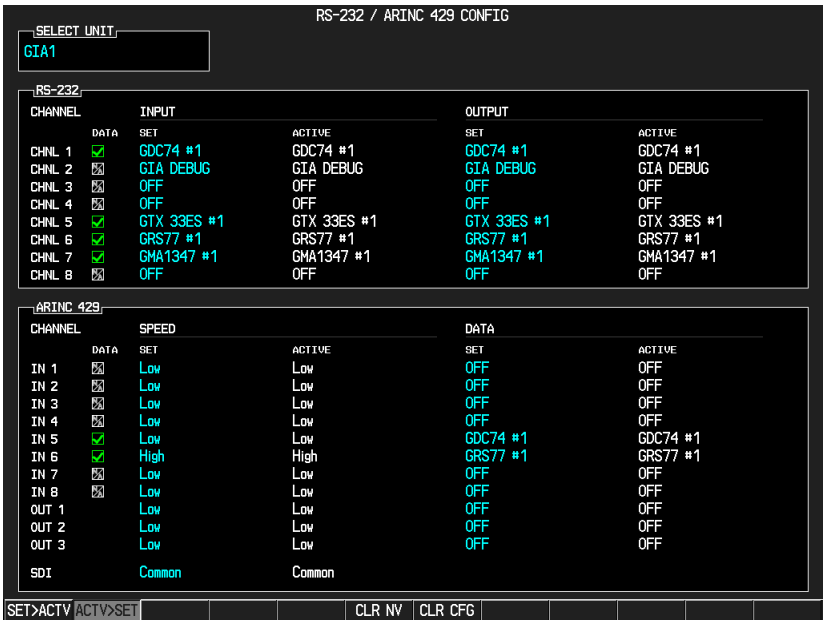

Figure 7-47 GTX 345R GIA 2 RS-232 / ARINC 429 Configuration

13. From the ***GIA2*** subpage in the GIA page group, select the **ACTV>SET** soft key. Refer to Figure 7-48 for an example. “ES” only appears for GDU versions 9.10 and later.

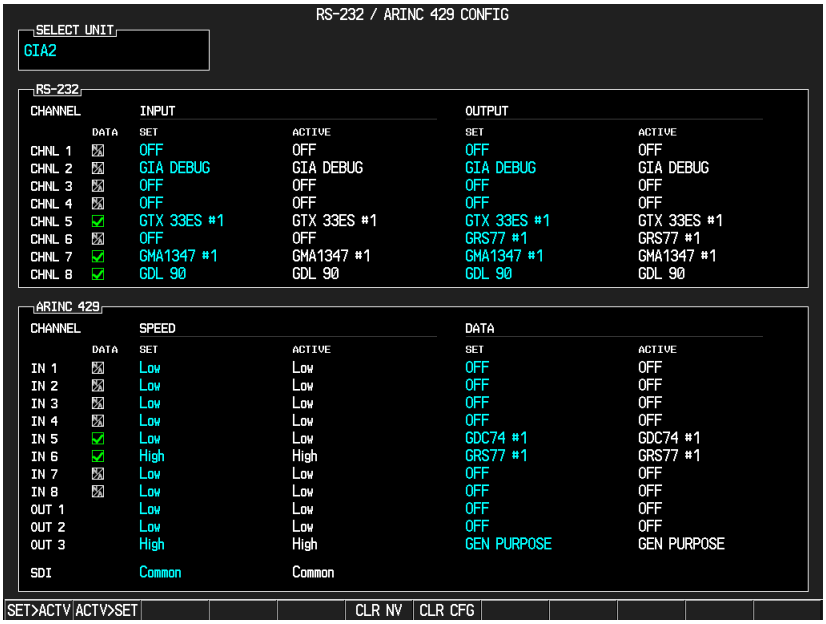

Figure 7-48 GTX 335R GIA 2 RS-232 / ARINC 429 Configuration

14. If FIS-B is connected, configure the appropriate RS-485 IN PORT for *GDL 90 ADS-B* depending on the connected port. Refer to Figure 7-49 for an example.
15. Select the **ACTV>SET** soft key on the ***GIA(1 or 2) RS-485*** page.

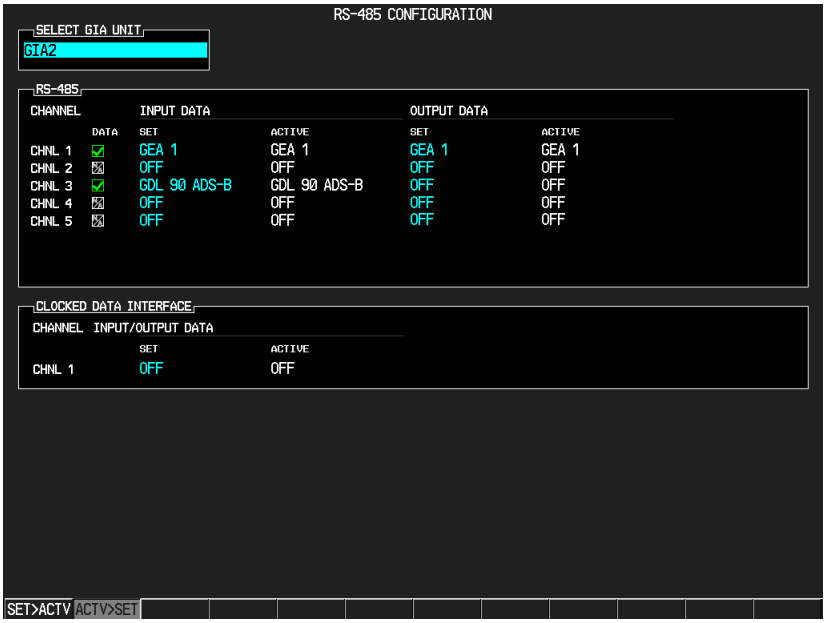

Figure 7-49 GTX 345R GIA 2 RS-485 Configuration

16. If TIS-B is connected, go to ***GIA2 Discrete OUT***. Select the **ACTV>SET** soft key. Refer to Figure 7-50 for an example. This is only valid for GDU software versions 9.10 and later.

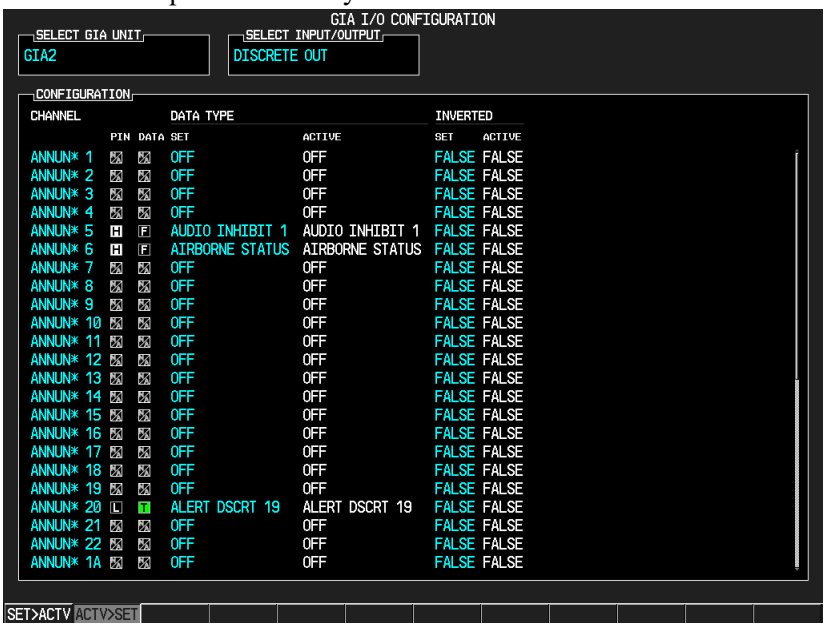

Figure 7-50 GTX 345R GIA 2 Discrete Out I/O Configuration

17. From the ***XPDR*** page group, push the **ACTV>SET** soft key. Refer to Figure 7-51 for an example.

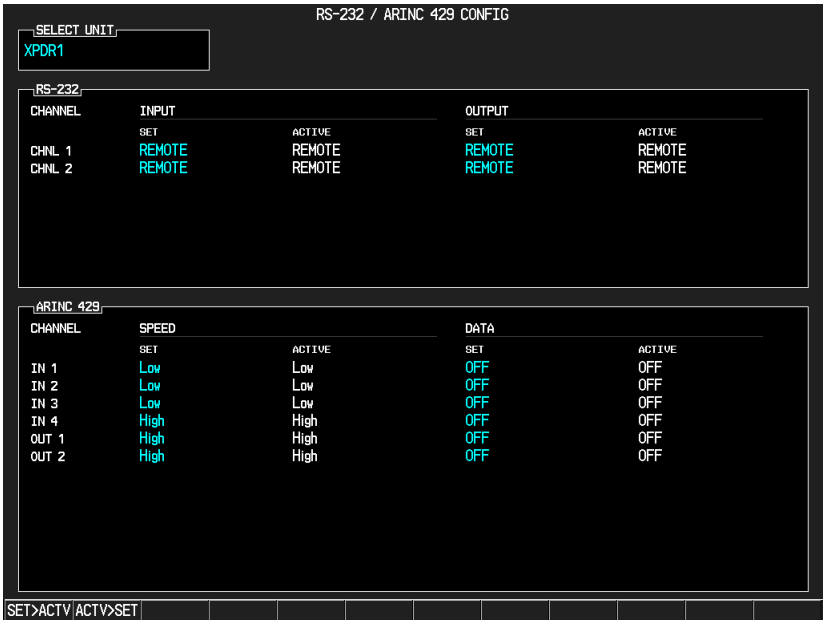

Figure 7-51 GTX 345R XPDR RS-232 / ARINC 429 Configuration

18. From the ***Transponder Configuration*** subpage, push the **ACTV>SET** soft key. Refer to Figure 7-52 for an example.

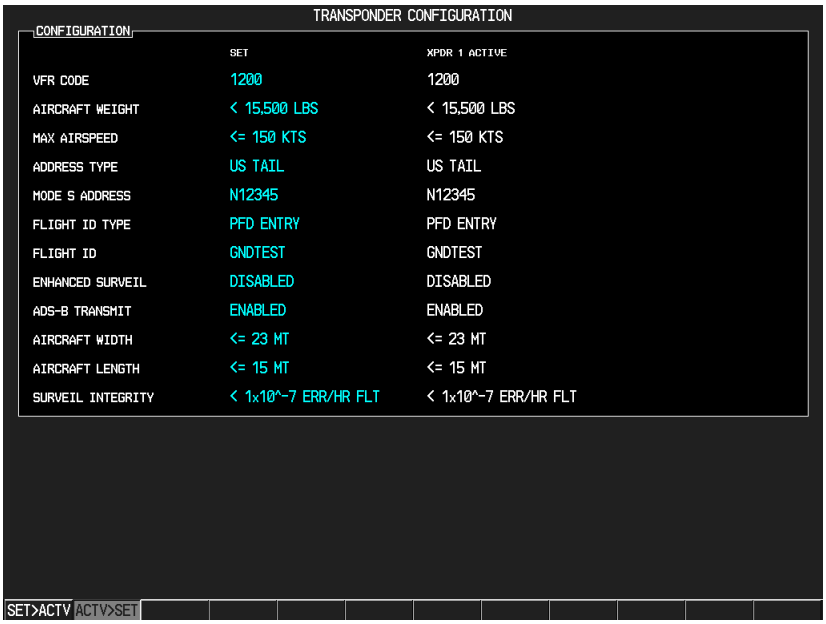

Figure 7-52 GTX 345R Transponder Configuration

19. Verify the GTX 345R volume is adequate.
    a. It may be necessary to adjust the volume settings on the UNSWITCHED IN or the ALTITUDE WARNING discrete, if it was used. Refer to Figure 7-53 for an example. The recommended setting is *0*.

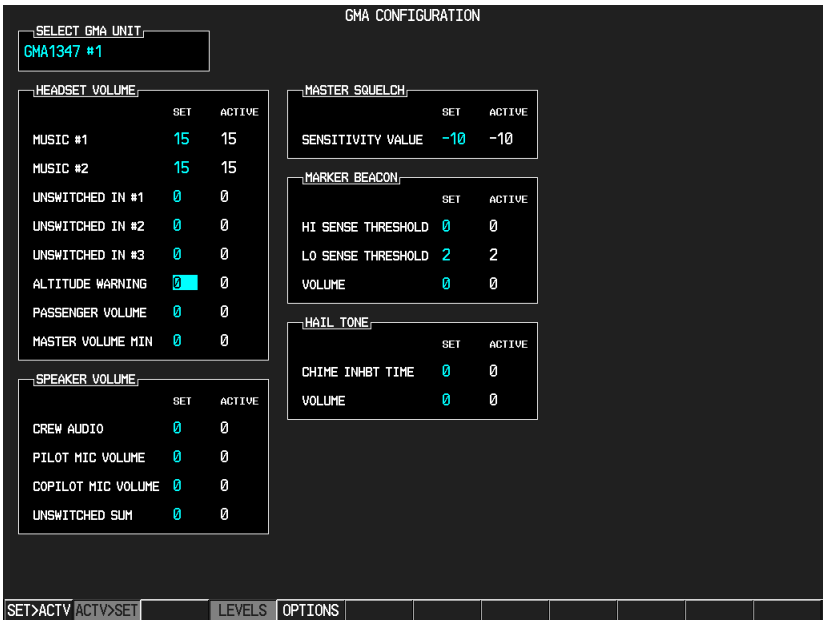

Figure 7-53 GMA Audio Configuration

20. From the ***System Status*** page in the System page group, verify the system status for the transponder is *OK*. Refer to Figure 7-54 for example.
21. If an active traffic system was interfaced to the GTX 345R unit, the unit must be configured according to the Traffic Sensors section of Appendix C.
22. If the statuses are *OK*, recycle power into Normal mode and perform the remainder of the required transponder checks.

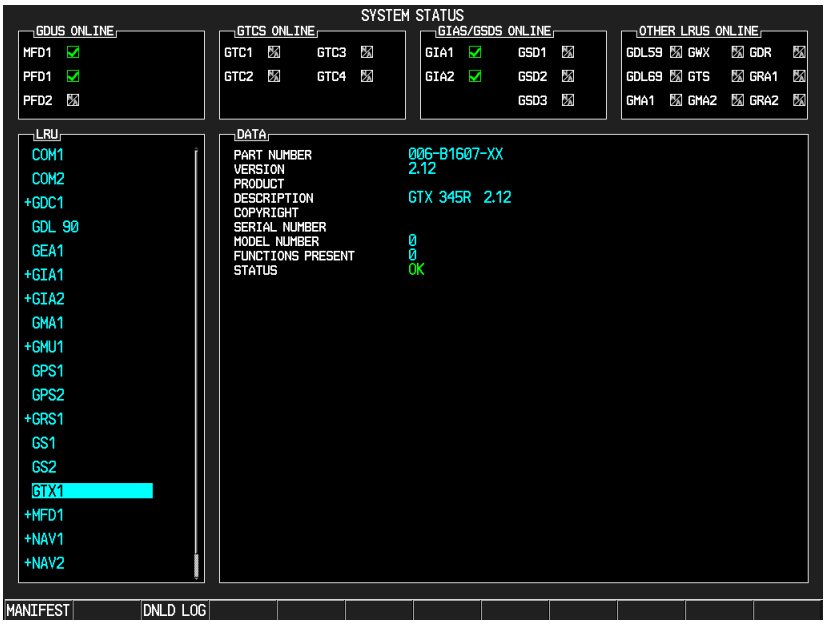

Figure 7-54 GTX 345R System Status

7.4.4 Dual Transponder Configuration

This section is for the configuration of dual GTX 3X5 transponders.

XPDR #1 must be a GTX 335R. XPDR #2 must be a GTX 345R. Configuration items depicted in the following images will vary depending on the aircraft and interfaced LRUs.

This STC only supports dual GTX 3X5 transponder installations for the following aircraft:

- Cessna 208 Caravan
- Cessna Citation C501
- Piper PA-46
- Socata TBM 700/850/900

1. The GTX 335R and the GTX 345R must be configured prior to configuring the G950/G1000 system.
2. Download the appropriate GTX 3X5 G1000 Interface Card on a 2 GB SD card in accordance with P/N 005-00734-05 Rev. 9 (or later).
3. Insert the interface card into the top slot of the PFD.
4. Enter Configuration mode on all displays by pushing the **ENT** key while energizing the displays.
5. From the System page group, select the ***System Upload*** subpage.
6. Under Airframe, select the appropriate aircraft model and GDU software version from the drop-down list.
7. Select **GTX 335 #1, GTX 345 #2**. Refer to Figure 7-55 for an example.

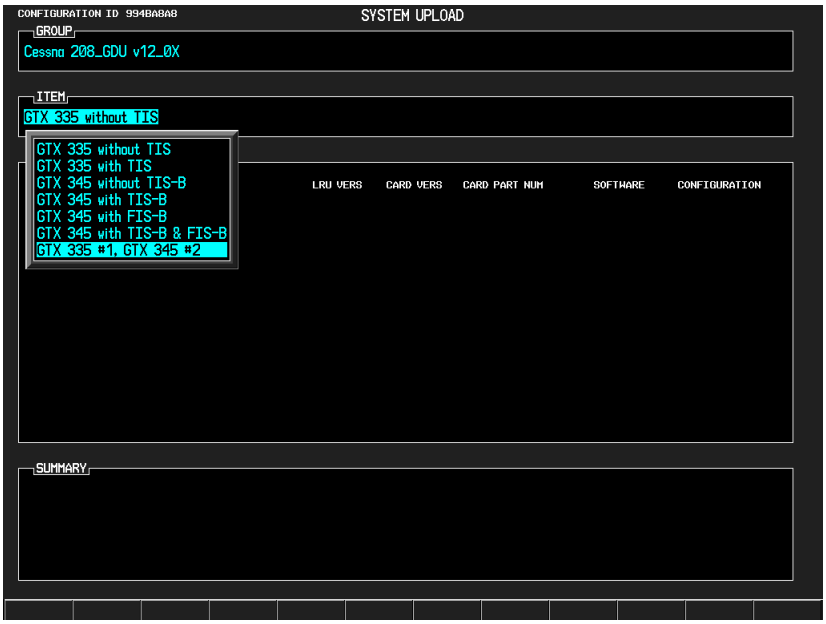

Figure 7-55 Dual GTX 3X5 System Upload Item

8. Push the **LOAD** soft key.
9. Push the **UPDT CFG** soft key.

10. From the ***GIA1*** subpage in the GIA group, push the **ACTV>SET** soft key. Refer to Figure 7-56 for an example.

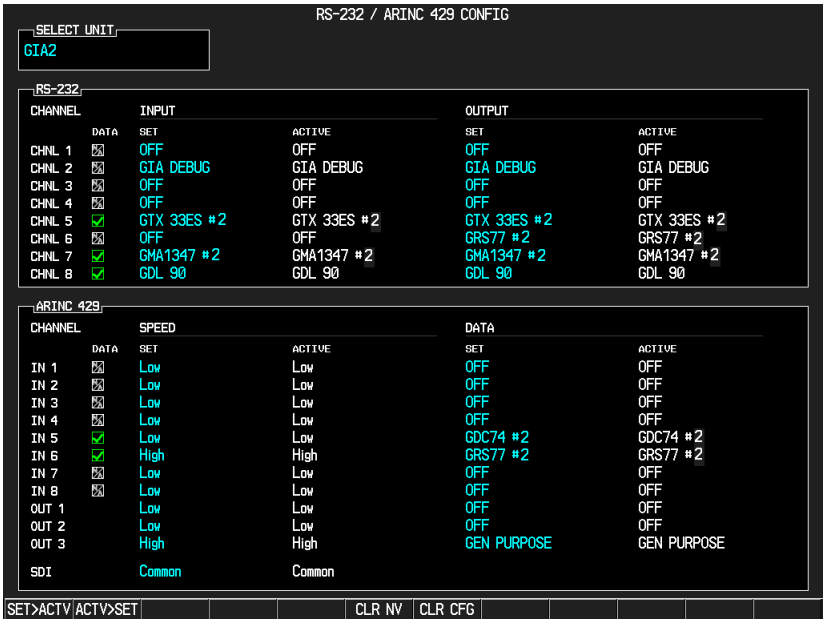

Figure 7-56 GTX 345R GIA1 RS-232/ARINC 429 Configuration

11. If TIS-B is connected, configure the appropriate GIA2 RS-232 Port for *GDL 90* depending on the connected port. Refer to Figure 7-57 for an example.
12. Configure the appropriate ARINC 429 OUT Port for *GEN PURPOSE* depending on the connected port. Refer to Figure 7-57 for an example.
13. Push the **ACTV>SET** soft key on the ***GIA2*** page. Refer to Figure 7-57 for an example.

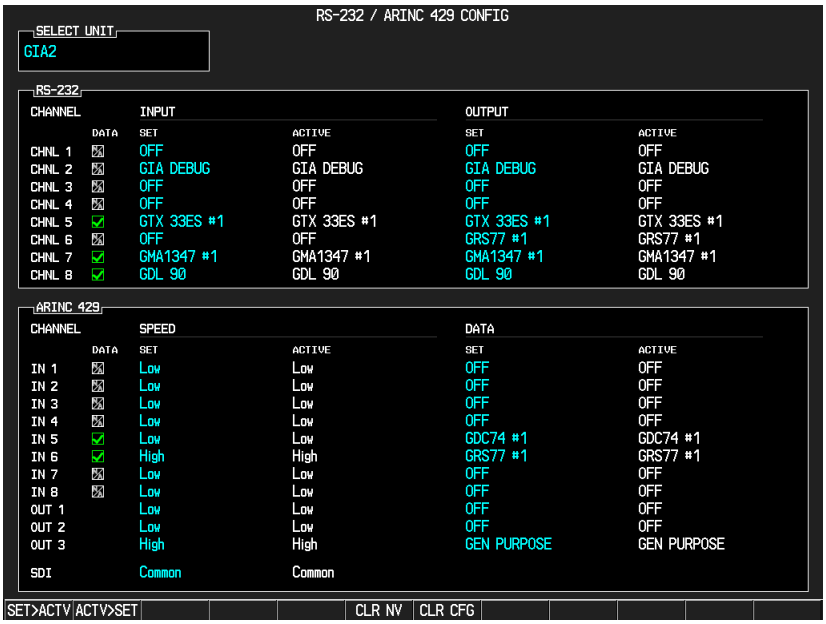

Figure 7-57 GTX 335R GIA 2 RS-232 / ARINC 429 Configuration

14. If FIS-B is connected, configure the appropriate GIA2 RS-485 IN PORT for *GDL 90 ADS-B* depending on the configured port. Configure an available RS-485 OUT Port. Refer to Figure 7-58 for an example.
15. Push the **ACTV>SET** soft key on the ***GIA2 RS-485*** page.

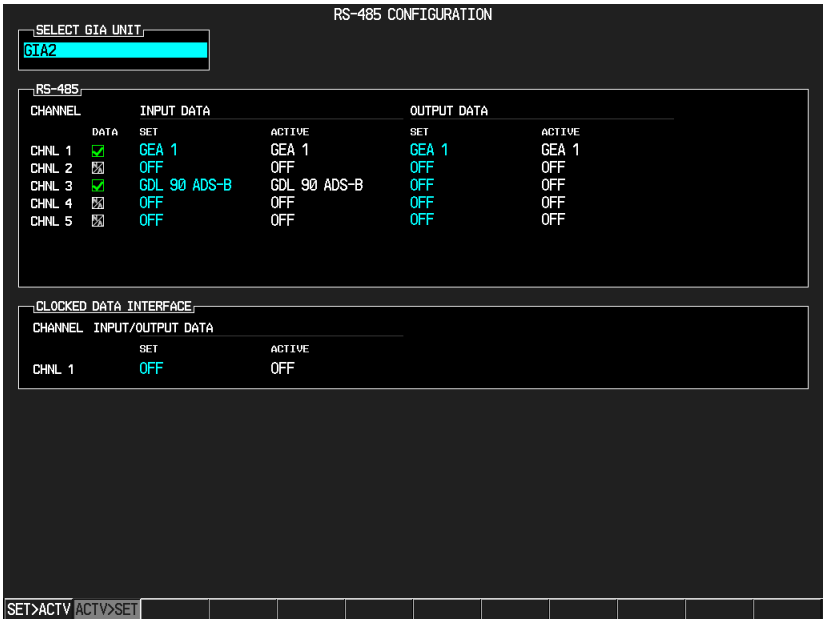

Figure 7-58 GTX 345R GIA 2 RS-485 Configuration

16. From ***GIA2 Discrete OUT***, push the **ACTV>SET** soft key. Refer to Figure 7-59 for an example. This is only valid for GDU software v9.10 and later.

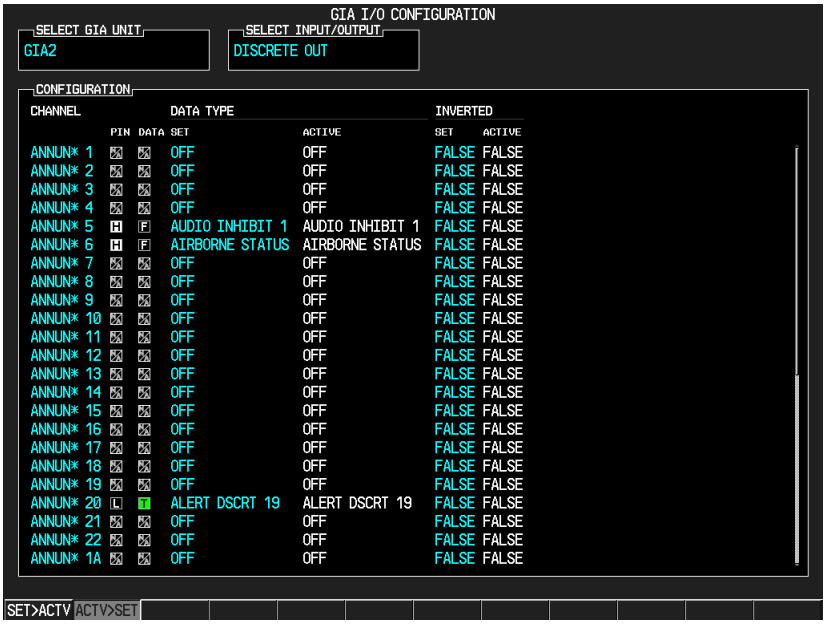

Figure 7-59 GTX 345R GIA 2 Discrete Out I/O Configuration

17. From the ***XPDR1*** page group, push the **ACTV>SET** soft key. Refer to Figure 7-60 for an example.
18. From the ***Transponder Configuration*** subpage, push the **ACTV>SET** soft key. Refer to Figure 7-61. Verify that all settings between the XPDR 1 column and XPDR 2 column are the same. The system will not function properly if any differences exist.

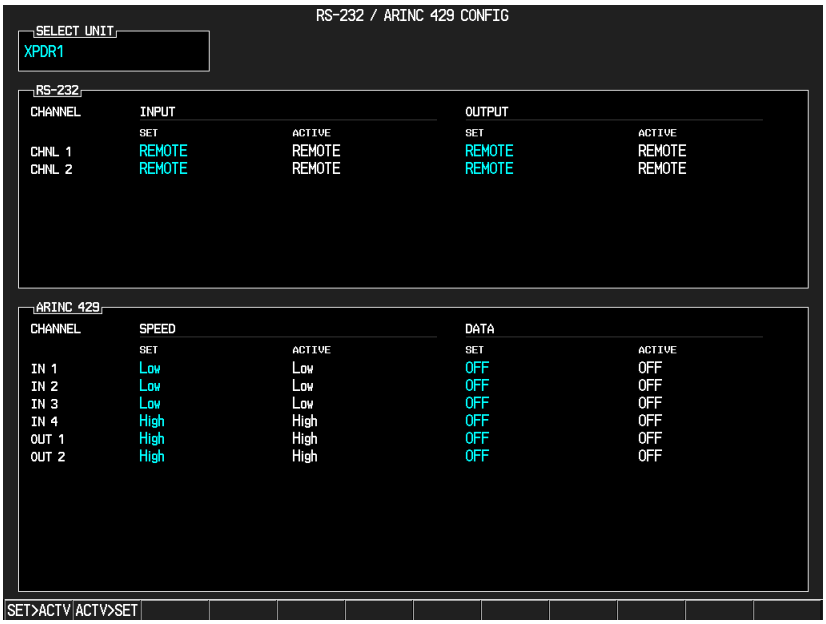

Figure 7-60 DUAL GTX 3X5R XPDR RS-232 / ARINC 429 Configuration

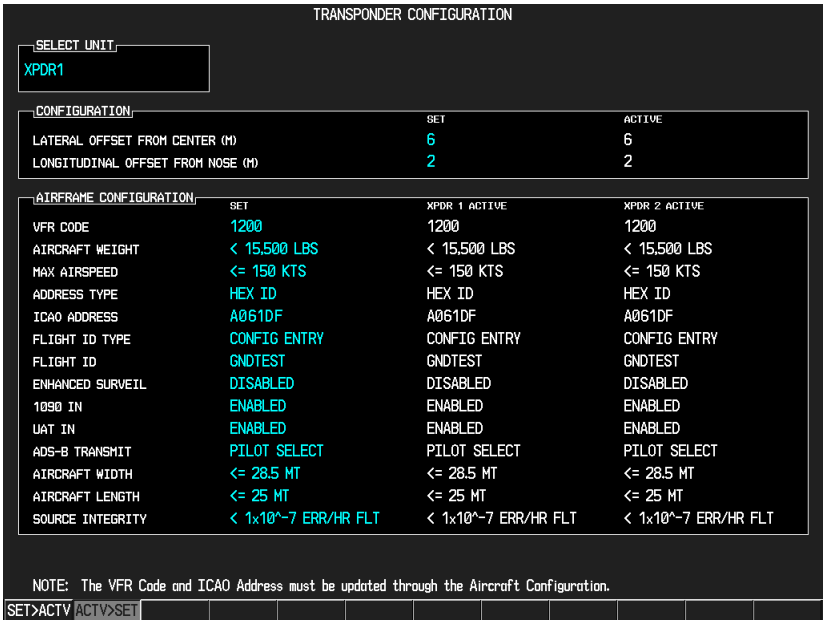

Figure 7-61 DUAL GTX 3X5 TRANSPONDER Configuration

19. From the ***System Status*** page in the System page group, verify the system status for the transponder is *OK*. Refer to Figure 7-62.
20. If an active traffic system was interfaced to the GTX 345R unit, the unit must be configured according to the Traffic Sensors section of Appendix C.
21. If the statuses are *OK*, power off unit. Power on in Normal mode and complete the required transponder checks.

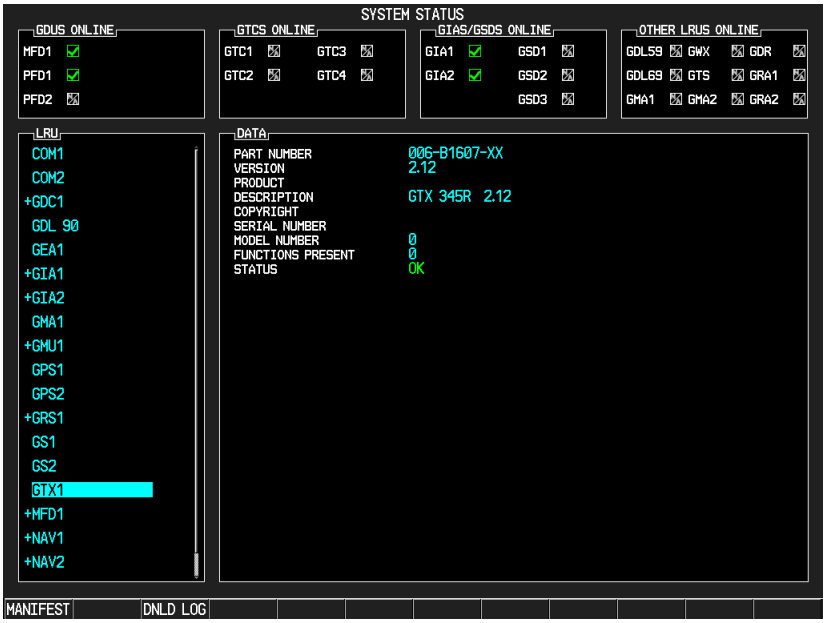

Figure 7-62 GTX 3X5 System Status

7.5 GTX 33/330 Configuration

NOTE

Configuration data must be recorded in the form provided in Appendix A of GTX 33X and GTX 3X5 ADS-B Maintenance Manual and inserted into the permanent aircraft maintenance records. 190-00734-11

NOTE

The configuration descriptions given in this section reflect the software version listed in GTX 33X and GTX 3X5 ADS-B AML STC Equipment List.

NOTE

The procedures contained in this section must be completed for each installed transponder.

Refer to the latest *GTN 6XX/7XX Part 23 AML STC Installation Manual* (P/N 190-01007-A3) for procedures on configuring remote GTX units. Refer to Appendix C for configuration settings.

Refer to the latest *GNS 480 (CNX80) Color GPS/NAV/COM Installation Manual* (P/N 560-0982-01) for procedures on configuring remote GTX units. Refer to Appendix C for configuration settings.

Hold down the **FUNC** key and push the **ON** key to access the configuration pages.

- **FUNC** key sequences forward through the configuration pages
- **START/STOP** key reverses through the pages, stopping at the ***Menu*** page
- **CRSR** key highlights selectable fields on each page
- When a field is highlighted, the **0** – **9** keys put in numeric data and the **8** or **9** keys move through list selections. Push the **CRSR** key to accept changes
- When a field is highlighted, push the **FUNC** key to move to the next configuration page without saving the changes

Changes made through the configuration pages are stored in EEPROM memory. Power off the unit to exit configuration pages. For normal operation, power on, without holding the **FUNC** key.

7.5.1 Configuration Menu Page

Figure 7-63 Jump To Page

Configuration Menu

- **JUMP TO** page provides the capability to select a Configuration mode starting page without having to step through all of the pages
- Push the **CRSR** key and sequence through to the applicable selection with **8** and **9** keys
- Jump to the selection by pushing **CRSR** again with the applicable selection highlighted
- **FUNC** key steps to the next configuration page
- **START/STOP** key reverses until stopping at **JUMP TO** menu page

Table 7-21 Jump To Selections

Selection	Description
DIAGNOSTICS	Jumps to ***Gray Code Input*** page.
DISPLAY/AUDIO	Jumps to ***Audio Volume*** page.
I/O CONFIG	Jumps to ***ARINC 429 INPUT #1*** page.
ACFT CONFIG	Jumps to ***Operation Configuration #1*** page.

7.5.2 Audio Mode Pages

Figure 7-64 Audio Mode First Page

Figure 7-65 Audio Mode Second Page

Voice And Volume

Select applicable Voice. *OFF* is not available for traffic (TIS) audio. Set the GTX volume to ensure aural messages/tones are audible under anticipated noise environmental conditions.

Message

Message is a test function only. Choose each selection to listen to the message.

Table 7-22 Message Selection Descriptions

Selection	Description
VOICE (MALE/FEMALE)	Sets the voice to *Male* or *Female*. Default is male voice.
VOLUME	Volume is adjusted from 0 (default) to maximum with the **8** or **9** key.
MESSAGE (0-9)	Selected audio tones and messages:
	0 = Toggles a continuous tone on and off.
	1 = Short Attention Tone, precedes voice messages.
	2 = "Leaving Altitude" voice message when altitude monitor is active and the altitude deviation is exceeded.
	3 = "Traffic" voice message when a TIS traffic alert is received (similar to a "Traffic Advisory" in TCAS terms).
	4 = "Timer Expired" voiced message when the countdown timer expires.
	5 = "Traffic Not Available" voice message when TIS service is not available or out of range of an operating TIS Mode S site.
	6 through **9** are not used at this time.
ALTITUDE MONITOR	*Off*, *Tone*, or *Message*.
COUNT DOWN TIMER	*Off*, *Tone*, or *Message*.
PAGE CHANGE	Enables/disables altitude monitor subpage when altitude deviation is exceeded.

7.5.3 Traffic Messages Page

Traffic Messages

Sets the Traffic Messages to *Tone* or *Message*. TIS provides notification of close proximity traffic. A test flight is recommended upon completion of the setup.

Figure 7-66 Traffic Messages Page

7.5.4 Display Mode Page

Figure 7-67 Display Mode Page

Table 7-23 Display Mode Selections

Selection	Description
AUTO (Automatic)	DEFAULT. Display automatically changes between Positive mode (during the day) and Negative mode (at night), depending on ambient light level received by the photocell.
NGTV (Negative)	Display always has light characters on a black background, regardless of ambient lighting.
PSTV (Positive)	Display always has black characters on a light background, regardless of ambient lighting.

Level

Sets the ambient light level for AUTO mode to change between negative and positive display. The higher the number, the brighter the ambient light level to change over. This field has a range of 0 to 99, with the default set to 75.

7.5.5 Display Backlight Page

If a lighting bus is selected (any selection other than *Photo*), and the lighting bus control is set to its minimum (*daytime*) setting, the display brightness tracks the GTX 330 photocell.

Figure 7-68 Display Backlight Page

Table 7-24 BKLT (Backlight) Selections

Selection	Description
AUTO (Automatic)	DEFAULT. Display backlighting is automatically controlled, based on configuration page parameters. When AUTO is selected, the ***Display*** page does not show to the pilot.
MAN (Manual)	Display backlighting is pilot-controlled on the GTX 330 ***Display*** page. No backlight parameters can set when the manual mode is selected.

LVL (Level)

This shows the current level of display backlighting based on the lighting input source (lighting bus voltage or the ambient light if the source is PHOTO) and the settings on this configuration page. This field has a range of 0 to 999. The level is set by pushing the **8** and **9** keys when MAN mode is selected. The field only shows when in AUTO mode. It cannot be changed.

RSP TIME (Response Time)

This sets the speed that brightness adjusts to ambient light changes (only for AUTO backlight mode). The higher the number, the slower the display changes. This field has a range of 0 to 7, with the default set to 4.

MIN (Minimum) (Auto Only)

This sets the minimum brightness of the display. The higher the number, the brighter the minimum brightness. Display minimum brightness has a range of 0 to 99, with the default set to 8. Verify the display lighting characteristics match those of other equipment in the panel under night lighting conditions.

Table 7-25 BKLT SRCE (Backlight Source) Selections

Selection	Description
PHOTO (Photocell)	DEFAULT. Backlight level is selected by the ambient light level as measured by the photocell on the GTX 330.
14V	Backlight level tracks a 14 VDC aircraft lighting bus.
28V	Backlight level tracks a 28 VDC aircraft lighting bus.
5V	Backlight level tracks a 5 VDC aircraft lighting bus.

SLOPE (Auto Only)

This sets the sensitivity of the display brightness to changes in the input level. The higher the number, the brighter the display for a given increase in the input level. This field has a range of 0 to 99, with the default set to 50.

Offset (Auto Only)

This adjusts the lighting level up or down for any given input level. This field has a range of 0 to 99, and is set to 50 at the factory. This can also be used to match lighting curves with other equipment in the panel.

7.5.6 Key Lighting Page

Figure 7-69 Key Lighting Page

The key lighting mode is always the same as display backlight mode. The mode must be changed on the ***Display Backlight Configuration*** page. If the lighting mode is *Auto*, then the key lighting parameters can be changed on this page.

Table 7-26 Key Lighting Selections

Selection	Description
AUTO (Automatic)	Key lighting is automatically controlled based on the parameters put in on this configuration page.
MAN (Manual)	Key lighting is controlled manually by the pilot on the GTX 330 ***Display*** page.

LVL (Level)

This shows the current level of key lighting, based on the lighting input source (lighting bus voltage, or the ambient light if the source is *PHOTO*) and the settings on this configuration page. This field has a range of 0 to 999 and is display only.

RSP TIME (Response Time)

This sets the speed the brightness adjusts to ambient light changes (only for AUTO key lighting mode). The higher the number, the slower the key lighting changes. This field has a range of 0 to 7, and is set to 4 at the factory.

MIN (Minimum) (Auto Only)

This sets the minimum brightness of the key lighting. The higher the number, the brighter the minimum brightness. Key lighting minimum brightness has a range of 0 to 99, and is set to 8 at the factory. Verify key lighting characteristics match those of other equipment in the aircraft panel under night lighting conditions.

Table 7-27 Key Lighting Source Selections

Selection	Description
PHOTO (Photocell)	DEFAULT. Key lighting level is selected by the ambient light level as measured by the photocell on the GTX 330.
14V	Backlight level tracks a 14 Volt DC aircraft lighting bus.
28V	Backlight level tracks a 28 Volt DC aircraft lighting bus.
5V	Backlight level tracks a 5 Volt DC aircraft lighting bus.

SLOPE (Auto Only)

This sets the sensitivity of the key lighting brightness to changes in the input level. The higher the number, the brighter the key lighting for a given increase in the input level. This field has a range of 0 to 99, and is set to 50 at the factory.

OFFSET (Auto Only)

This adjusts the key lighting level up or down for any given input level. This field has a range of 0 to 99, and is set to 50 at the factory. This can also be used to match lighting curves with other equipment in the panel.

7.5.7 Contrast Configuration Page

Figure 7-70 Contrast Mode Page

Table 7-28 Contrast Mode

Selection	Description
AUTO (Automatic)	DEFAULT. Display contrast is automatically compensated for LCD temperature and other factors. An offset can be put in for the contrast level adjustment.
MAN (Manual)	Display contrast is manually adjusted here or by the pilot using the GTX 330 ***Contrast*** page.

CONTRAST LEVEL ADJUSTMENT

- **8** key decreases contrast level
- **9** key increases contrast level
- In Manual Contrast mode, direct adjustment of display contrast. In Automatic Contrast mode, adjusts the offset to automatically compensated contrast
- Default set to offset of 50

7.5.8 VFR Key Configuration Page

Figure 7-71 VFR Key Configuration Page

VFR KEY FUNCTIONALITY

- Available settings are *Enable* or *Disable*
- **8** key selects Disable
- **9** key selects Enable

Table 7-29 VFR Key Selections

Selection	Description
ENABLE	DEFAULT. The **VFR** key functions normally in this setting.
DISABLE	When the **VFR** key is disabled and the **VFR** key is pushed, the unit shows an advisory message that indicates no operation took place. Advisory message clears after 5 seconds elapse or if the **CLR** key is pushed. All other keys behave normally.

7.5.9 ARINC 429 Configuration Pages

Figure 7-72 ARINC 429 Input First Page

Figure 7-73 ARINC 429 Input Second Page

ARINC 429 INPUT

All ARINC 429 input configuration settings are available on ARINC 429 input ports 1 through 3. The same input data source cannot be selected for multiple input ports.

- ***ARINC 429 Input*** pages configure ARINC 429 input ports
- ARINC 429 IN 1 INPUT allows automated start and stop of flight timer
- Places transponder in ground (GND) mode upon landing
- ADLP is included for future use
- GARMIN TAS (HIGH) must be selected for a Garmin GTS connection
- Barometric data is not included in the GARMIN TAS format. A separate barometric data source is required

Table 7-30 ARINC 429 Inputs

Selection	Description	Notes
OFF	No information received.	
ADC NO ALT	Temperature and speed information.	
ADC W/ALT	Altitude, temperature, and speed information.	
AHRS	Attitude and heading information.	
EFIS NO ALT	Selected course, heading, temperature, joystick waypoint, and speed data.	
EFIS W/ALT	Same as “EFIS NO ALT” with the addition of altitude data.	
FLIGHT CTRL	Selected altitude, barometric setting, and AFCS pitch discrete.	
GPS/FMS	Selected waypoint information and GPS ground speed recognition.	
GRMN DISPLAY	Same as “GPS/FMS” with added ability of receiving phase of flight data from a Garmin 400/500 series (non-WAAS).	
GRMN TAS	TAS Mode data from Garmin GTS 820/850.	[2]
GRMN 743A	Standard GNSS input. Includes position, velocity, and integrity data.	[1]

Notes:

[1] The “GRMN 743A” format does not fully support Version 2 ADS-B Out compliance with AC 20-165. For full compliance to AC 20-165, the RS-232 REMOTE input format must be used with a compatible SBAS/GPS position source.

[2] Refer to the applicable GTS STC Installation Manual for configuration procedures. GTS 8X5 (P/N 190-01279-00) or GTS 8XX (P/N 190-00993-00).

ARINC 429 OUTPUT

NOTE

All ARINC 429 output configuration settings are available on ARINC 429 output ports 1 and 2.

Figure 7-74 ARINC 429 Output Page

- GTX 330 can configure to include GPS, Airdata, AHRS, EFIS/Airdata, and ADLP ARINC 429 inputs. These function as an ARINC 429 data concentrator
- ARINC 429 OUTPUT pages configure ARINC 429 output ports
- Ports can configure independently for applicable function(s)
- Both ARINC 429 outputs send high-speed ARINC 429 data

Table 7-31 ARINC 429 Output Selections

Selection	Description	Notes
OFF	No information transmitted or received.	
GARMIN	Data concentrator that combines data from GTX 33/330 data inputs.	
GARMIN w/TIS	Same as “GARMIN” format but also includes TIS.	
GARMIN TAS	Supports Garmin GTS 8XX interface.	[1]

Notes:

[1] Refer to the applicable GTS STC Installation Manual for configuration procedures. GTS 8X5 (P/N 190-01279-00) or GTS 8XX (P/N 190-00993-00).

For aircraft with multiple traffic systems and multiple 400/500 series units, configure ARINC 429 OUTPUT CHANNEL 1 for *GARMIN W/TIS* and ARINC 429 OUTPUT CHANNEL 2 for *GARMIN*. TIS is then enabled over CHANNEL 1.

The Garmin format is a data concentration function. This data is sent out at specified intervals using high-speed ARINC 429 (100 kHz). Refer to Table 7-32 for ARINC 429 transmit data labels and rates.

Table 7-32 ARINC 429 Transmit Data Labels

Label	Data	Rate
100	Selected Course (degrees)	200 ms
203	Pressure Altitude (feet)	100 ms
204	Barometric Corrected Altitude (feet)	100 ms
206	Indicated Air Speed (knots)	100 ms
210	True Air Speed (knots)	100 ms
211	Total Air Temperature (degrees)	100 ms
213	Static Air Temperature (degrees)	100 ms
306	Joystick Lat	500 ms
307	Joystick Lon	500 ms
314	True Heading	100 ms
320	Magnetic Heading (degrees)	100 ms
371	GA Equipment Identifier	500 ms
377	Equipment Identifier	500 ms

This data is sent out in packets approximately every 0.5 seconds at high speed (100 kHz), in the specified sequence:

Table 7-33 Transmit Data Sequence

Label	Data
350	Fault Summary
274	Transponder Control
313	Own Aircraft Track Angle
357 (RTS)	Request to Send
130	Intruder Range (0 – 8 sets)
131	Intruder Altitude (0 – 8 sets)
132	Intruder Bearing (0 – 8 sets)
357 (EXT)	End of Transmission

7.5.10 RS-232 Input and Output Page

NOTE

RS-232, Channel 1 is preferred for connections to an ADS-B Out Version 2 compliant position source. If Channel 1 connectivity is not possible, Channel 2 is satisfactory. Refer to Appendix B and aircraft specific interconnect diagrams for interconnect details.

Figure 7-75 RS-232 Input-Output Page

For ADS-B Out Version 2 compliance, set one of the available GTX 330/330D RS-232 inputs to *REMOTE*. Connect to one of the approved position sources listed in *GTX 33X and GTX 3X5 ADS-B AML STC Equipment List*.

Table 7-34 RS-232 Input/Output Selections

Selection	Input/ Output	Description	Notes
OFF	I/O	Default setting, no data is transmitted/received, the altitude code input is not from an RS-232 source.	
ADC NO ALT	INPUT	RS-232 serial air data information from Shadin ADC 200, 200+, 2000.	
ADC W/ALT	INPUT	RS-232 serial air data information from Shadin ADC 200, 200+, 2000 plus altitude data.	
FADC NO ALT	INPUT	RS-232 serial air data information from Shadin 9628XX-X family of air data computers and fuel/air data computers.	
FADC W/ALT	INPUT	RS-232 serial air data information from Shadin 9628XX-X family of air data computers and fuel/air data computers plus altitude data.	
GNS	I/O	RS-232 serial remote data; receives SBAS/GPS information in the Garmin GNS “GDL-88” format.	
GPS	INPUT	RS-232 ground speed from a GPS device.	
ICARUS ALT	I/O	RS-232 serial altitude.	
ICRS ALT 25ft	INPUT	Reports altitude in 25-foot increments, pressure altitude from a GAE equipped GTX 3X5.	
REMOTE	I/O	RS-232 serial remote data; receives SBAS/GPS information in the Garmin GNS “ADS-B OUT” or the Garmin GTN “ADS-B” format.	[1] [2] [3]
REMOTE + TIS	OUTPUT	RS-232 serial output remote data with TIS.	
SHADIN ALT	INPUT	RS-232 serial altitude from Shadin 8800T, 9000T, 9200T.	
SHDN ALT 25ft	INPUT	Reports Shadin 8800T, 9000T, 9200T altitude in 25-foot increments.	

Notes:

[1] It is the responsibility of the installer to verify that the output selection for this channel is either OFF, REMOTE, or REMOTE + TIS.

[2] It is the responsibility of the installer to verify that the software version of the GPS Position source is compatible. Refer to the GNS 430/530 WAAS or GTN 6XX/7XX Installation Manual for configuration information for the SBAS/GPS source.

[3] It is the responsibility of the installer to verify the ADS-B Out system is compliant with AC 20-165, and to ensure compatibility between the GTX 330 and the ADS-B Out position source equipment. Refer to *14 CFR 91.227 ADS-B Out Compatible Equipment* for compatible equipment shown to be eligible for 14 CFR 91.227-compliant installations in accordance with AC 20-165.

7.5.11 Operation Configuration Pages

Figure 7-76 Configuration Page - First

VS RATE (Vertical Speed Rate)

This field is the typical vertical speed for climb/descent of the aircraft. The settable number determines the rate of climb the GTX 330 will assume as liftoff for starting the flight timer and operational functions. The range is 100 feet per minute to 9999 feet per minute and is set to 500 fpm at the factory.

FORMAT (Altitude Format)

This field determines how the pressure altitude is shown on the GTX 330 display.

Table 7-35 Altitude Format Selections

Selection	Description
FLIGHT LVL (Flight Level)	DEFAULT. The pressure altitude is shown in hundreds of feet. For example, a pressure altitude of 12,300 feet is shown as “FL 123”.
FEET	Pressure altitude is shown in feet.
METERS	Pressure altitude is shown in meters.

VFR ID (VFR Transponder Code)

This field is the four-digit code that is selected when the user pushes the GTX 330 **VFR** key. The VFR code for any altitude in the United States is 1200. The default is set to 1200.

ALTITUDE ALERT DEVIATION (Altitude Format)

This field determines the amount of altitude difference from selected altitude to generate an altitude alert deviation. It is set to 200 feet, the minimum altitude, at the factory.

SQUAT SWITCH

Figure 7-77 Configuration Page - Second

Table 7-36 Squat Switch Configuration

FIELD	Selection	Description	Configuration/Notes
SQUAT SWITCH?	NO	DEFAULT. This sets the GTX to use automated airborne determination from other sources.	Refer to the description. This setting should only be used on those aircraft without an existing squat switch.
	YES	This sets the GTX to use the aircraft squat switch for airborne determination.	This is the **preferred** configuration of this STC. Refer to Appendix B and aircraft specific wiring diagrams for interconnect information.
SENSE	HIGH	With the sense set to *HIGH* the unit will go into ground mode when Pin 17 (SQUAT SWITCH IN) is pulled high.	If the SQUAT SWITCH IN discrete is connected, and the aircraft air/ground state is On-Ground when the input is open or high, then select *HIGH*.
	LOW	With the sense set to *LOW* the unit will go into ground mode when Pin 17 (SQUAT SWITCH IN) is pulled low.	If the SQUAT SWITCH IN discrete is connected, and the aircraft air/ground state is On-Ground when the input is grounded, then select *LOW*.
DELAY TIME	2	This is the number of seconds the aircraft must be on the ground before the GTX 330 automatically switches to GND mode when it has a means of determining the aircraft is on the ground.	Default is 24. A setting of *2* is **required** for this STC.

AUTO FLIGHT TIMER

Available choices are MAN, CLEAR, and ACCUM. Selecting **CLEAR** resets flight time to zero and starts the flight timer when transition from a ground to airborne state is sensed.

Table 7-37 Auto Flight Timer Selection Description

Selection	Description
MAN	Manual selection. DEFAULT. Flight timer START/STOP is controlled manually by the pilot.
CLEAR	Automated flight timer START/STOP resets to zero at every lift off.
ACCUM	Automated flight timer START/STOP accumulates, meaning, it continues counting up at lift off.

7.5.12 Temperature Page

Figure 7-78 Temperature Page

SENSOR INSTALLED

This sets the sensor to *YES* or *NO*. The default is *NO*. This STC does not approve the interface to an external OAT probe.

UNITS

This sets the units to degrees Fahrenheit or Centigrade. Default is degrees C.

7.5.13 Mode S Address Entry Pages

NOTE

It is important to put in the Mode S address correctly in the GTX 330.

When unit is powered on for first time, or an incorrect address is recognized, the unit will prompt requiring a correct aircraft address.

When the aircraft address is recorded, the unit remains on and in its current mode.

7.5.14 US Tail and Hex Address Entry Pages

If powered on for the first time, proceed to step 5.

1. To access configuration pages, push and hold the **FUNC** key while the unit is powered on.
2. Power on unit by pushing **ON**, **ALT**, or **STBY** key or power on with the avionics master switch (while holding the **FUNC** key). The unit conducts a self-test routine and displays "Jump to Diagnostics" page.

Figure 7-79 Mode S US Tail # Page

Figure 7-80 Mode S Address HEX Page

3. Repeatedly push the **FUNC** key to access address entry page.

ADDRESS US TAIL# N _ _ _ _ _ or ADDRESS HEX _ _ _ _ _ _

NOTE

It is not necessary for the installer to convert a US aircraft registration number (N – Number) to a Hex address. The GTX 330 converts the US registration number to hexadecimal automatically.

4. To select between Hex or Tail number, push the **CRSR** key, then **8** or **9** key to move to the correct selection.
5. To put in the address hex code or the US registration number, push the **CRSR** key one time (this highlights the address field).
6. Put in the aircraft address using the number keys. Push a key repeatedly to scroll through the digit/alpha characters for that key.
7. Push the **CRSR** key to select the next numeric entry field. Put in the next character as stated in the previous step, then move onto the next one. Repeat the process until the number is complete.
8. When finished, push the **CRSR** key to accept the number entry.
9. Using the **FUNC** and/or **START/STOP** keys, toggle through the pages to get off of, then back onto, the aircraft address page and verify the address is correct.

The unit now contains a Mode S address and can be powered off. To power on in Normal mode, push only the **ON**, **ALT**, or **STBY** key (without holding the **FUNC** key) or power on with the avionics master switch.

Table 7-38 Mode S Address, Aircraft Registration Page Selections

Selection	Description
US TAIL #	N-Registration Number
HEX	Hexadecimal code address

7.5.15 Mode S Flight ID Pages

Flight ID can be recorded in TSO Class 2A units (P/N 011-00455-( )).

NOTE

When a flight ID number contains a space, the GTX 330 automatically removes spaces in data transmission.

Select ***Flight Id Pwr Up Entry*** page if the flight crew is required to input an aircraft identification designator each time the unit is powered on. When flight ID is correct, the flight number call sign for ATC radio contact is the same flight identification the GTX 330 Mode S transponder replies to ATC radar interrogations.

Table 7-39 Mode S Flight ID Page Selections

Selection	Description
SAME AS TAIL	If address is a US registration number, FLT ID can be the same.
POWER UP ENTRY	Put in FLT ID every time unit is powered on in Normal mode.
CONFIG ENTRY	Put in FLT ID in Configuration mode only.

The screen depicted indicates the FLIGHT ID PWR UP ENTRY (choice 2) after the **CRSR** key is pushed, and unit is ready to receive flight identification.

Figure 7-81 Flight ID Pwr-Up Entry Page

Put in all Mode S flight IDs:

1. Push **CRSR** once to highlight address field.
2. Set aircraft address using number keys. Push a key repeatedly to scroll through digit/alpha characters for that key.
3. Push **CRSR** to select next alphanumeric entry field. Set the next character as stated in previous step, repeating process until the number is complete.
4. Push **CRSR** to accept number entry.
5. Using **FUNC** and/or **START**/**STOP** keys, toggle through pages, leave, then return to aircraft address page.
6. Verify address is correct.
7. Power off unit.
8. Power on in Normal mode.
9. If the ***Flight Id Pwr-up Entry*** page was selected, verify the unit requests correct page during system start-up.

The POWER UP ENTRY requires that a variable Mode S FLIGHT ID is set each time unit is powered on. The selections *SAME AS TAIL* and *CONFIG ENTRY* are fixed entries.

Figure 7-82 Power-Up Config Entry Page

Figure 7-83 Power-Up Same as Tail Page

7.5.16 GPS Configuration Page

NOTE

The default setting for GPS INTEGRITY is 1E-3. *A setting of* 1E-7 *is required for this STC.*

Figure 7-84 GPS Configuration Page

Table 7-40 GPS Configuration Page Selections

Selection	Description
GPS X OFST	Set to a value between 6 (R) and 6 (L) in 2m steps; Default is Unknown
GPS Y OFST	Set to a value between 2 and 60 in 2m steps; Default is Unknown
GPS INTEGRITY	1E-7

7.5.17 Mode S Aircraft Type Page

Used to support Mode S protocols.

Figure 7-85 A/C Type Page

Table 7-41 Aircraft Type Selections

Selection	Description
AC TYPE	UNKNOWN, <15.5K Lb, >=15.5K Lb
MAX AIRSPEED	UNKNOWN, <=75 kt, <=150 kt, <=300 kt, or >300 kt

AIRCRAFT TYPE

This sets the AIRCRAFT TYPE message to a weight of less than 15,500 lbs, more than or equal to 15,500 lbs, or unknown weight. Defaults to less than 15,500 lbs.

MAXIMUM AIRSPEED

This sets the AIRCRAFT AIRSPEED message to a speed of less than or equal to 75 knots, between 75 knots and 150 knots, between 150 knots and 300 knots, more than 300 knots, or unknown airspeed. Defaults to less than or equal to 150 knots. Put in the aircraft's maximum cruising true airspeed capability.

7.5.18 Aircraft Size Page

Figure 7-86 Aircraft Size Page

AIRCRAFT LENGTH TYPE

Available selections for setting the length of aircraft:

- Less than or equal to 15 meters
- Less than or equal to 25 meters
- Less than or equal to 35 meters
- Less than or equal to 45 meters
- Less than or equal to 55 meters
- Less than or equal to 65 meters
- Less than or equal to 75 meters
- Less than or equal to 85 meters
- More than 85 meters

Select the aircraft length type that best matches the aircraft.

AIRCRAFT WIDTH TYPE

Available selections for setting the width of aircraft:

- Less than or equal to 11.5 meters
- Less than or equal to 23.0 meters
- Less than or equal to 28.5 meters
- Less than or equal to 33.0 meters
- Less than or equal to 34.0 meters
- Less than or equal to 38.0 meters
- Less than or equal to 39.5 meters
- Less than or equal to 45.0 meters
- Less than or equal to 52.0 meters
- Less than or equal to 59.5 meters
- Less than or equal to 67.0 meters
- Less than or equal to 72.5 meters
- Less than or equal to 80.0 meters
- More then 80.0 meters

Select the aircraft width that best matches the aircraft.

7.5.19 ADS-B Page

NOTE

The settings in this section will affect future ADS-B features and capabilities provided to aircraft that are ADS-B Version 2 compliant in accordance with AC-20-165( ). However, the effect of these settings are not apparent until these features are fully implemented. Please read the description carefully and set these parameters based on the each particular aircraft's ability to receive ADS-B data on the 1090 MHz and/or 978 MHz (UAT) band.

If 1090 Input and UAT Input are both set to *YES*, it is important the aircraft actually has equipment capable of receiving ADS-B on both bands along with the capability to show from both bands simultaneously. If not, a complete traffic picture will not be given by the ADS-B ground stations.

Figure 7-87 ADS-B Page

ADS-B TX

This page is used to support ADS-B configurations. Automatic Dependant Surveillance-Broadcast (ADS-B) TX can be set to *DISABLE*, *ENABLE*, or *PILOT SET*. *PILOT SET* or *ENABLE* is required for this STC.

When ADS-B TX is set to *PILOT SET*, ADS-B transmissions can be selected for *ON* or *OFF* by the crew. When ADS-B TX is set to *ENABLE*, ADS-B transmissions are automatically active whenever the GTX is operated in the GND, ON, or ALT modes.

1090 In

The 1090 Input setting can be set to *YES* or *NO*. This setting controls bits in the transponder's ADS-B Out message that indicates if the aircraft has 1090 MHz ADS-B In equipment. If 1090 MHz ADS-B In equipment is installed in the aircraft, this setting should be set to *YES*. If not, set this to *NO*.

UAT In

The UAT Input setting can be set to *YES* or *NO*. This setting controls bits in the transponder's ADS-B Out message that indicates if the aircraft has 978 MHz (UAT) ADS-B In equipment. If 978 MHz (UAT) ADS-B In equipment is installed in the aircraft, or if the owner/operator of the aircraft will be using a hand held UAT receiver for traffic information, then this setting should be set to *YES*. If not, set this to *NO*.

7.5.20 EHS Page

Figure 7-88 EHS Page

EHS

This sets Enhanced Surveillance (EHS) to *DISABLE* or *ENABLE*. Set to *DISABLE*. When EHS is set to *DISABLE*, there is no active enhanced surveillance. Additional approval is required for EHS.

8 OPERATION/PERFORMANCE CHECKOUT

GROUND CHECK - CONFIGURATION MODE

8.1 Ground Checks - Interfaces (Configuration Mode) 8-2
8.1.1 Airborne/Ground Test mode 8-2
8.1.2 Audio Panel Interface 8-3
8.1.3 Radio Altimeter Interface 8-4
8.1.4 Discrete Switch Interfaces 8-5

GROUND CHECK - NORMAL MODE

8.2 Ground Checks - Interfaces (Normal Mode) 8-6
8.2.1 Air Data Interface 8-6
8.2.2 AHRS/IRU Interface 8-6
8.2.3 GPS Interface (External GPS Receiver) 8-7
8.2.4 Control Display Interface 8-7
8.2.5 Wireless Interface (GTX 345) 8-7
8.2.6 External Traffic System Interface (GTX 345) 8-8
8.2.7 TIS-A Interface (GTX 33/330/335) 8-9
8.2.8 TIS-B / FIS-B Interface (GTX 345) 8-9

GROUND CHECK - PERFORMANCE

8.3 Ground Checks - Performance 8-11
8.3.1 GPS Reception (Internal GPS Receiver) 8-11
8.3.2 Regulatory Tests 8-11
8.3.3 ADS-B Out Test 8-12
8.3.4 EMC Check 8-13

If dual GTXs are installed, the performance and checkout procedures contained in the following sections must be completed for each installed transponder.

Certain test procedures require the use of a Mode S transponder ramp tester, such as an Aeroflex IFR-6000 or TIC TR-220. Specific instructions for operating the ramp tester are contained in the applicable operator's manual.

8.1 Ground Checks - Interfaces (Configuration Mode)

8.1.1 Airborne/Ground Test mode

Certain test procedures require the transponder to be placed in an airborne state to reply to any Mode A or Mode C interrogations. The GTX uses advanced Air/Ground logic to determine the state of the transponder. This logic must be temporarily bypassed in order to place the transponder in an airborne state. To place the transponder into an airborne state, perform the following procedure.

For GTX 33/330 Software v8.02 (and Higher) and GTX 3X5:

Perform the applicable procedure for the GTX interface installed in the aircraft.

For Panel-Mounted GTX 330 or GTX 3X5 Transponders:

1. Start the GTX in Ground Test mode (hold the **CRSR** key and press the **ALT** key).
2. "TEST" will be annunciated on the GTX 330 and a "GROUND TEST MODE" alert message will display on the GTX 3X5 message screen.
3. Ensure the GTX is in ALT mode.

NOTE

The GTX must be in ALT mode for ADS-B out testing.

For Remote-Mounted GTX 33 or GTX 3X5R Transponders (GTN Interface):

1. Start the GTN in Configuration mode (hold the **HOME** key while cycling power).
2. Navigate to the ***XPDR 1 Installation Settings*** page and press the **Force Airborne Test** key.
3. Restart the GTN in Normal mode.

For Remote-Mounted GTX 33 Transponders (GNS 480 Interface):

1. Enter Configuration mode on the GNS 480.
2. Navigate to the GTX configuration pages and locate the SQUAT SWITCH setting.
3. Set the SQUAT SWITCH to *YES* and set the SENSE to *LOW*. If a squat switch is present in the aircraft, configure the SENSE to *override*.
4. Restart the GNS 480 and transponder in Normal mode. The transponder will now be in airborne mode.
5. After tests are completed, reconfigure the transponder and the GNS 480 back to their original settings.

For Remote-Mounted GTX 3X5R Transponders (GNS 480, G1000 Interface):

1. Connect the GTX 3X5 Installation Tool to the GTX 3X5R unit.
2. Place the unit into Ground Test mode from the ***State*** page of the GTX 3X5 Installation Tool.

NOTE

The transponder should only be placed into Airborne Test mode for testing. Once testing is complete, either return the squat switch to original settings or remove the GTX from Ground Test mode.

For G1000 Remote-Mounted GTX 3X5R Transponders (GDU Software v15.00 and Later):

The following is a method of placing a GTX 3X5 in an airborne state while on the ground.

1. Place the MFD in Normal mode and place only the PFD 1 in Configuration mode.
2. Go to the ***Transponder Configuration*** page and press the **GND TEST** soft key (only enabled when the aircraft is detected as on the ground).
3. Cycle the power on the PFD 1 only after the **GND TEST** soft key is pressed, ensuring power remains applied to the other displays.
4. The transponder is now in an airborne state for test purposes. Cycle aircraft power to take it out of Ground Test mode.

8.1.2 Audio Panel Interface

The audio alert volume checkout can be performed during unit configuration, as described in Section 7.2.1. If the checkout procedure is performed during unit configuration, steps 1 and 2 of each of the following procedures should be skipped.

For Panel-Mounted GTX 33/330 Transponders:

1. Start the GTX in Configuration mode (hold the **OFF** key to power down the unit, then hold the **FUNC** key and push the **ON** key).
2. Navigate to the ***Audio Mode*** page (press the **START/STOP** key to reach the "Jump To" menu. Select the DISPLAY/AUDIO item to jump to the ***Audio Mode*** page).
3. Choose each selection of the MESSAGE item to play the test audio.
4. Verify the aural messages/tones will be heard under all anticipated cockpit noise conditions.

For Panel-Mounted GTX 3X5 Transponders:

1. Start the GTX 3X5 in Configuration mode (hold the **OFF** key to power down the unit, then hold the **ENT** key and push the **ON** key).
2. Navigate to the ***AUD*** page (push the **FUNC** key to cycle through pages).
3. Choose each selection of the TEST AUDIO item to play the test audio.
4. Verify the aural messages/tones will be heard under all anticipated cockpit noise conditions.

For Remote-Mounted GTX 33 Transponders (GTN Interface):

1. Start the GTN in Configuration mode (hold the **HOME** key while cycling power).
2. Navigate to the Transponder Audio Configuration menu (***External Systems → XPDR → Audio Config***).
3. Choose each selection of the TEST TONE and TEST AUDIO items. Touch the play key (triangle) to play the selected test audio.
4. Verify the aural messages/tones will be heard under all anticipated cockpit noise conditions.

For Remote-Mounted GTX 3X5R Transponders (PC Install Tool):

1. Start the GTX 3X5R in Configuration mode (with the GTX 3X5R powered off, connect a computer to the GTX 3X5R via USB. Apply power to the GTX 3X5R, then run the Install Tool.)
2. Navigate to the ***Audio Configuration*** page.
3. Choose each selection of the TEST AUDIO item. Select the **TEST** key to play selected test audio.
4. Verify the aural messages/tones will be heard under all anticipated cockpit noise conditions.

8.1.3 Radio Altimeter Interface

For Panel-Mounted GTX 33/330 Transponders:

1. Start the GTX in Configuration mode (hold the **OFF** key to power down the unit, then hold the **FUNC** key and push the **ON** key).
2. Navigate to the ***429 RX*** page (push the **START/STOP** key to reach the "Jump To" menu. Select the I/O CONFIG item to jump to the ***ARINC 429 RX*** page).
3. Check the A429 channel that is configured for RADAR ALTIMETER (the correct channel should be labeled "164").
4. Verify the radar altitude provided is correct.

For Panel-Mounted GTX 3X5 Transponders:

1. Start the GTX 3X5 in Configuration mode (hold the **OFF** key to power down the unit, then hold the **ENT** key and push the **ON** key).
2. Navigate to the ***DIAG*** page (push the **FUNC** key to cycle through pages).
3. Select the A429 channel that is configured for RADIO ALTITUDE (the correct channel should be labeled "164").
4. Verify the radar altitude provided is correct.

For Remote-Mounted GTX 3X5R Transponders:

1. Start the GTX 3X5R in Configuration mode (with the GTX 3X5R powered off, connect a computer to the GTX 3X5R via USB. Apply power to the GTX 3X5R, then run the Install Tool).
2. Navigate to the ***Connection Status*** page under the ***Diagnostics*** tab on the GTX 3X5 Install Tool.
3. Check the A429 channel that is configured for RADAR ALTIMETER.
4. Verify the radar altitude provided is correct.

8.1.4 Discrete Switch Interfaces

Perform the following procedure for each optional remote switch interfaced to the GTX transponder.

For Panel-Mounted GTX 330 Transponders:

1. Start the GTX in Configuration mode (hold the **OFF** key to power down the unit, then hold the **FUNC** key and push the **ON** key).
2. Navigate to the ***External Switch State*** page (push the **START/STOP** key to reach the "Jump To" menu. Select the DIAGNOSTICS item to jump to the ***Gray Code*** page. Push the **FUNC** key to cycle through pages).
3. Observe the External Switch States while activating each optional switch (for the squat switch, this may require the switch to be manually pulled *LOW* or *HIGH*, depending on configuration).
4. Verify the External Switch State indicates when each optional switch is activated.

For Panel-Mounted GTX 3X5 Transponders:

1. Start the GTX 3X5 in Configuration mode (hold the **OFF** key to power down the unit, then hold the **ENT** key and push the **ON** key).
2. Navigate to the ***DIAG*** page (push the **FUNC** key to cycle through pages).
3. Set the Discrete Inputs that are interfaced and configured for the GTX.
4. Observe the Discrete Input States while activating each optional switch (for the squat switch, this may require the switch to be manually pulled *LOW* or *HIGH*, depending on configuration).
5. Verify the Discrete Input State indicates when each optional switch is activated.

For Remote-Mounted GTX 3X5R Transponders:

1. Start the GTX 3X5R in Configuration mode (with the GTX 3X5R powered off, connect a computer to the GTX 3X5R via USB. Apply power to the GTX 3X5R, then run the Install Tool).
2. Navigate to the ***Discrete*** page under the ***Diagnostics*** tab on the GTX 3X5 Install Tool.
3. Observe the Discrete Input States while activating each optional switch (for the squat switch, this may require the switch to be manually pulled *LOW* or *HIGH*, depending on configuration).
4. Verify the Discrete Input State indicates when each optional switch is activated.

8.2 Ground Checks - Interfaces (Normal Mode)

8.2.1 Air Data Interface

The GTX receives altitude data from an external source or internally from the optional GAE. If a GAE is included in the installation, the Installed selection must be configured to *NONE* for portions of the following procedure. Refer to Section 7.2.5 for configuration instructions.

If the following steps do not perform correctly, check the electrical connections and configuration setup for the interfaced data source.

NOTE

After applying power to an altitude source, it may take several minutes to warm-up. During the warm-up period, the Altitude display on the GTX will display dashes.

1. Configure the GAE Installed selection to *NONE* if it is included in the installation.
2. Power up the GTX in Normal mode.
3. If there are multiple sources providing air data to the GTX, remove power from all but one source.
4. **For remote-mounted GTX 33 or GTX 3X5R transponders:** make sure the transponder field of the control display shows a red "X" when power is removed from the active source.

   For panel-mounted GTX 330 or GTX 3X5 transponders: make sure that the appropriate data on the GTX is displayed and agrees with the active source.
5. If there are multiple sources, remove power from the currently active source and apply power to another source that has not been checked.
6. Repeat steps 3 and 4 until all available sources have been checked.
7. Configure the GAE Installed selection to *GAE-12* if it is included in the installation.
8. Remove power from all external air data sources.
9. Repeat step 4 to check the GAE.

8.2.2 AHRS/IRU Interface

The GTX receives heading data from an external source. This check makes sure that the GTX is receiving data from these units.

1. Verify the GTX is powered on and is transmitting (i.e., the unit is not in SBY mode).
2. Verify the GTX is not in an *AIR* state.

Examine the electrical connections and configuration setup for the interfaced AHRS/IRU if the following steps do not perform correctly.

3. Using a test set capable of displaying ADS-B Out data, verify the heading reported from the active transponder matches that of the source.
4. Remove power from the heading source and verify the magnetic heading field displays dashes on the test set.
5. Repeat step 3 and step 4 for all transponders interfaced with an applicable heading source.

8.2.3 GPS Interface (External GPS Receiver)

The GTX receives position source data from an external source. This check ensures the GTX is receiving data from these units. Verify the GTX and the position source is powered on and has acquired a valid signal.

If the following steps do not perform correctly, examine the electrical connections and configuration setup for the interfaced position source.

NOTE

In order for the transponder to relay the additional accuracy and integrity required by AC 20-165A Version 2 compliant equipment, the GPS unit's RS-232 serial output must be configured to the extended ADS-B format. This is indicated via selections with a "+" in the selections title (e.g., "ADS-B OUT+", "GTX Mode S+", "Panel GTX w TIS+").

1. If there are multiple sources providing position source data to the GTX, remove power from all but one source.
2. **For remote-mounted GTX 33 or GTX 3X5R transponders:** verify "ADS-B FAIL" system message or annunciation is not active on the interfaced control display.

   For panel-mounted GTX 330 or GTX 3X5 transponders: verify "NO ADSB" or "NO 1090ES TX" annunciation is removed from the display.
3. If there are multiple sources, remove power from the currently active source and apply power to another source that has not been checked.
4. Repeat steps until all available sources have been checked.

8.2.4 Control Display Interface

Perform the following checkout procedure for each control display that is interfaced to the remote transponder:

1. Power on the interfaced control display and the transponder in Normal mode.
2. Verify there is no red "X" over the Transponder Data field on the control display.
3. Verify a code can be entered into the Code field on the control display; change the code.
4. Verify the new code that was entered is displayed in the Transponder field.

If Dual Transponders are Installed:

5. Select **Transponder 2** and repeat steps 2 through 4.
6. Pull the breaker on each transponders and make sure the correct Transponder Data field on the control display contains a red "X".

~~8.2.5 Wireless Interface (GTX 345)~~

~~The GTX 345 can interface to PEDs via Bluetooth using internal hardware or through a Flight Stream remote gateway.~~

~~NOTE~~

~~*A compatible PED with the Garmin Pilot application is required to perform the ground checks. Visit Garmin's website for a list of compatible devices.*~~

8.2.5.1 Internal Bluetooth Setup

If a Flight Stream device is interfaced to the GTX 345, the Bluetooth function is turned off on the GTX 345. Refer to Flight Stream installation data for Bluetooth setup and pairing procedures.

1. Place the GTX 345 into Bluetooth Pairing mode by navigating to the ***Bluetooth*** page under the System menu.
2. Enable Bluetooth connectivity on the PED. Once enabled, the GTX 345 will be viewable in the list of available devices.
3. Select the GTX 345 from the list of available Bluetooth devices on the PED.

8.2.5.2 Bluetooth Interface Check

After pairing a compatible PED with the GTX 345 or Flight Stream, perform the following checkout using the Garmin Pilot application:

1. On the Garmin Pilot application, go to the ***Connext*** page.
2. Select **GTX 345** from the list of devices and make sure the status is *Connected*.

If the GTX 345 is interfaced to a display capable of presenting traffic and/or weather data:

3. Crosscheck the traffic and/or weather data shown on the Garmin Pilot application against the data presented on the interfaced display.

8.2.6 External Traffic System Interface (GTX 345)

The following checkout procedure should be performed for GTX 345 units that are interfaced between an external traffic system (TAS/TCAS) and a traffic control display.

Examine the electrical connections and configuration setup for the GTX 345 and the interfaced TAS or TCAS system if the following steps do not perform correctly.

For a GTX 345 that is interfaced to a Garmin GTS 8XX, L-3 Communications SKY497/SKY899 SkyWatch®, or Honeywell KTA/KMH traffic system, and is not interfaced to a G950/G1000:

1. Go to the ***Traffic*** page on the interfaced control display that is configured for traffic system control.
2. Verify the TAS or TCAS system status does not indicate failed.
3. Verify the TAS or TCAS system operating mode can be changed by selecting *Operate* or *Standby* on the display. Make sure the TAS or TCAS system status indicates the selected mode (Operate or Standby).
4. Change the TAS or TCAS operating mode to *Standby*.
5. Select the traffic system test function on the display. Verify the TAS or TCAS system status indicates Test mode, the traffic system executes its self-test, and a self-test pattern is displayed on the traffic display.

For a GTX 345 that is interfaced to an Avidyne (Ryan) TAS 6XX (9900BX) traffic system, and is not interfaced to a G950/G1000:

1. Go to the ***Traffic*** page on the interfaced display configured for TCAD control.
2. Verify the TCAD system status does not indicate failed.
3. Verify the TCAD Ground mode can be selected by changing the on or off selection in the TCAD control menu. Make sure the TCAD system status indicates ground when Ground mode is selected and Standby or Operate otherwise.

For a GTX 345R that is interfaced to a TAS/TCAS traffic system, and is interfaced to a G950/G1000:

This checkout procedure must be performed with the GTX 3X5 Install Tool and a TCAS ramp tester.

1. Set the aircraft altimeter to 29.92" to find the local pressure altitude.
2. Connect the GTX 345R unit to the GTX 3X5 Installation Tool.
3. Set the TCAS ramp tester to the scenario in the table below.

Table 8-1 Ramp Test Pressure Altitude Check Scenario

Intruder Type	Intruder Start Distance	Intruder Start Altitude	Vertical Speed	Velocity
ATCRBS	10 NM	Local pressure altitude (from step 1)	0 fpm	0 Kts

4. Select the **Operate** key on the GTX 3X5 Install Tool ***State*** page to put the TCAS system into Operate mode.
5. Start the intruder test scenario on the test set.
6. Verify the intruder is shown with a relative altitude of "00" (same altitude as ownship) on the traffic display.
7. Select the **Standby** key on the GTX 3X5 Install Tool ***State*** page to put the TCAS system into Standby mode.
8. Select the **Disconnect** key on the GTX 3X5 Install Tool ***State*** page.
9. Disconnect the GTX 345R unit from the GTX 3X5 Install Tool.

8.2.7 TIS-A Interface (GTX 33/330/335)

If a GTX installation includes a TIS-A display interface, the traffic interface must be verified.

1. Select the Traffic Map on the display.
2. Ensure "TIS FAIL" is not displayed and that "NO DATA" (yellow) is not displayed.
3. On the ***Traffic Map*** page, make sure that the status of the traffic system is either "TIS Standby" or "TIS Operating/Unavailable" (i.e., "TAS" should not be displayed).

8.2.8 TIS-B / FIS-B Interface (GTX 345)

Go to the ***LRU Status*** page on the interfaced display.

For a GTX 345 Interfaced to a GTN:

1. Navigate to the GTX ***Status*** page (***System*** → ***External LRUs***).
2. Verify the GTX status is marked with a green check.

For a GTX 345R Interfaced to a G950/G1000:

1. Use the FMS knob to navigate to the ***System Status*** page in the AUX page group.
2. Verify the GTX status is marked with a green check in the LRU Info window.

For a GTX 345 Interfaced to a GDU 620:

1. Use the FMS knob to navigate to the ***AUX*** page on the MFD.
2. Press the **LRU** soft key.
3. Verify the GTX status is marked with a green check.

For a GTX 345 Interfaced to a GNS or MX20/GMX 200:

The following steps are required if the GTX 345 is interfaced to a GNS or MX20/GMX 200. They are recommended for all other displays. If the aircraft is not located within range of an FAA ground station, then an ADS-B ramp tester, such as an Aeroflex IFR-6000 or TIC TR-220, must be used to provide simulated TIS-B and FIS-B data to the GTX. Specific instructions for operating the ramp tester are contained in the applicable operator's manual.

1. Go to the ***Traffic*** page on the interfaced display.
2. Make sure there are no "ADS-B FAIL" or "TRAFFIC FAIL" annunciations on the ***Traffic*** page.
3. Observe targets of opportunity from ADS-B equipped aircraft or an FAA ground station.
4. Go to the ***Weather*** page on the interfaced display.
5. Set the ***Weather*** page to display multiple weather products. It may take up to 10 minutes after power-up for the system to begin receiving FIS-B weather products.
6. Ensure at least one selected weather product displays a valid time stamp.

8.3 Ground Checks - Performance

8.3.1 GPS Reception (Internal GPS Receiver)

NOTE

GPS reception checks are not necessary if an external GPS source is in use.

The GPS reception check is applicable to GTX 335 and GTX 345 units with the internal GPS receiver.

1. Make sure the LAT/LON on the ***ADS-B Out*** page matches a known reference.
2. Select 121.150 MHz on the COM transceiver to be tested.
3. Transmit for a period of 35 seconds.
4. Verify the GPS position remains valid.
5. Repeat steps 3 and 4 for these frequencies:

• 121.15 MHz	• 121.22 MHz	• 131.22 MHz	• 131.30 MHz
• 121.17 MHz	• 121.25 MHz	• 131.25 MHz	• 131.32 MHz
• 121.20 MHz	• 131.20 MHz	• 131.27 MHz	• 131.35 MHz

6. For VHF radios that include 8.33 kHz channel spacing, include the following frequencies in addition to those in step 5.

• 121.185 MHz	• 121.190 MHz	• 130.285 MHz	• 131.290 MHz

7. Repeat steps 2 through 6 for all remaining COM transceivers in the aircraft.
8. Turn on the TCAS system and make sure the GPS position remains valid if the aircraft is TCAS-equipped.
9. Use the SATCOM system to make sure the GPS position remains valid if the aircraft is SATCOM-equipped.

8.3.2 Regulatory Tests

With the transponder operating in Normal mode and in an airborne state (refer to Section 8.1.1), the following regulatory tests are required to be performed. The Altitude Reporting Equipment Test is required to be performed for each altitude source interfaced to the transponder, including the GAE.

These regulatory tests require the use of a Mode S transponder ramp tester, such as an Aeroflex IFR-6000 or TIC TR-220. Specific instructions for operating the ramp tester are contained in the applicable operator's manual.

1. Altitude Reporting Equipment Tests in accordance with 14 CFR Part 91.411 and Part 43 Appendix E.
2. ATC Transponder Tests and Inspections in accordance with 14 CFR Part 91.413 and Part 43 Appendix F.

8.3.3 ADS-B Out Test

The ADS-B Out test procedure requires the use of a Mode S transponder ramp tester, such as an Aeroflex IFR-6000 or TIC TR-220. Specific instructions for operating the ramp tester are contained in the applicable operator's manual.

1. Verify the aircraft is in a location where a GPS signal is receivable (e.g., outdoors with a clear view of the sky).
2. Power on the aircraft/avionics.
3. Verify the GPS source(s) have acquired a position.
4. Verify the GTX transponder is in ADS-B TX mode.
5. Using the transponder test set, make sure the following ADS-B Out parameters are being transmitted:
   - Aircraft emitter category is Light Airplane < 15,500 lbs (on the TR-220 this is indicated as “A1”)
   - Aircraft length documented in the aircraft checkout log
   - Aircraft width documented in aircraft checkout log
   - 1090 ADS-B In capability matches the configuration setting documented in the aircraft checkout log
   - UAT (978) ADS-B In capability matches the configuration setting documented in the aircraft checkout log
6. Place the GTX transponder into airborne state (refer to Section 8.1.1).
7. If dual GPS sources are connected to the GTX, disable the GPS source not being checked by covering the GPS antenna or removing power from that navigator.
8. Verify the GPS source not being checked is no longer receiving satellite data.
9. Verify the GPS source being checked has acquired position.
10. Select ALT mode on the GTX.
11. Using the transponder test set, make sure the following ADS-B Out parameters are being transmitted:
    - NACv $\geq$ 1
    - SDA $\geq$ 2
    - SIL $\geq$ 3
    - NACp $\geq$ 8
    - NIC $\geq$ 7
12. If dual GPS sources are connected to the GTX, repeat steps 6 through 10 for the other GPS source.

8.3.4 EMC Check

An EMC check must be conducted for each GTX after it is installed and all interfaces to external equipment are verified to be correctly working. The EMC check verifies that the GTX is not producing unacceptable interference in other avionics systems and that other avionics systems are not producing unacceptable interference in the GTX. An example EMC Source/Victim matrix is shown in Figure 8-1.

1. Enter equipment installed in the aircraft into the Source row and Victim column of the fillable form.
2. Apply power to all avionics systems except the GTX.
3. Verify all existing avionics systems are properly functioning.
4. Apply power to the GTX. For the GTX 3X5R, connect a computer to the GTX 3X5R via USB before applying power to the unit. Apply power to the GTX 3X5R, then run the Install Tool.
5. If the unit is a GTX 345 with the internal Bluetooth feature enabled, pair a compatible PED device to the GTX 345.
6. Remove power from all other avionics systems (for the GTX 33, do not remove power from the interfaced control display).
7. Apply power and/or operate the systems listed on the fillable form, one system at a time.
8. **For panel-mounted GTX 330 or GTX 3X5 transponders:** make sure there are not any active faults on the GTX (panel mount unit).

   For remote-mounted GTX 33 transponders: make sure there are not any active fault message for the GTX 33 on the interfaced control display.

   For remote-mounted GTX 3X5R transponders: make sure there are not any active faults on the GTX 3X5 Install Tool ***Status*** page (remote mount unit).
9. Verify each system functions properly.

For VHF COM Radios:

   a. Monitor one local frequency, one remote (far field) frequency, and one unused frequency.
   b. Verify no unintended squelch breaks or audio tones interfere with communications.

For VHF NAV radios:

   a. Monitor one local frequency, one remote (far field) frequency, and one unused frequency.
   b. Verify there are no guidance errors.
   c. Verify no audio tones interfere with the station ID.

10. Repeat steps 7 through 9 until every system listed on the fillable form has been checked.

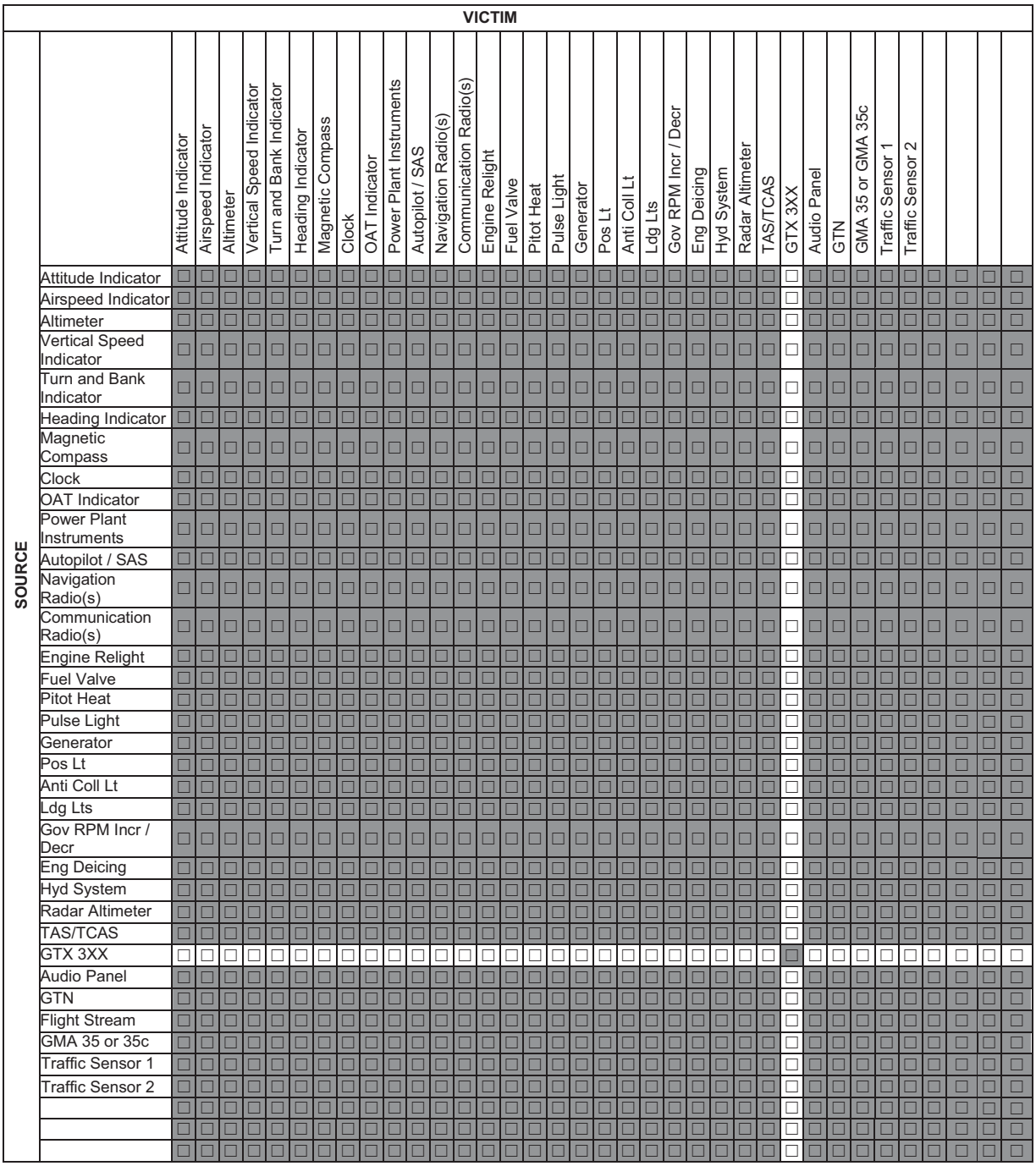

Figure 8-1 Example EMC Source/Victim Matrix

9 DOCUMENTATION CHECKS

9.1 AFMS Completion 9-2
9.2 Airplane Flight Manual Supplement 9-5
9.2.1 Configuration and Checkout Log 9-5
9.2.2 Instructions for Continued Airworthiness 9-5
9.3 Weight and Balance 9-6

9.1 AFMS Completion

The GTX 33/330 Section 1.4 and the GTX 3X5 AFMS are intended to specify the installation configuration for the GTX system. It is the responsibility of the installer to mark the appropriate boxes in the AFMS with indelible ink using the following guidance.

Equipment Installed

The Equipment Installed subsection indicates the type of GTX transponder installed. Mark the boxes as described for Transponder #1, and for Transponder #2 if a dual installation was performed.

[1] GTX 330
[2] GTX 330D
[3] GTX 33
[4] GTX 33D
[5] GTX 335
[6] GTX 335D
[7] GTX 335R
[8] GTX 335DR
[9] GTX 345
[10]GTX 345D
[11]GTX 345R
[12]GTX 345DR

Mark box [1] if the installed transponder is P/N 011-00455-60 or 011-00455-80.

Mark box [2] if the installed transponder is P/N 011-00455-70 or 011-00455-90.

Mark box [3] if the installed transponder is P/N 011-00779-20 or 011-00779-30.

Mark box [4] if the installed transponder is P/N 011-00779-21.

Mark box [5] if the installed transponder is P/N 011-03300-00, 011-03300-20, 011-03300-4( ).

Mark box [6] if the installed transponder is P/N 011-04331-00.

Mark box [7] if the installed transponder is P/N 011-03301-0( ) or 011-03301-40.

Mark box [8] if the installed transponder is P/N 011-04332-00.

Mark box [9] if the installed transponder is P/N 011-03302-0( ), 011-03302-2( ), 011-03302-4( ), or 011-03302-6( ).

Mark box [10] if the installed transponder is P/N 011-04333-00.

Mark box [11] if the installed transponder is P/N 011-03303-0( ) or 011-03303-4( ).

Mark box [12] if the installed transponder is P/N 011-04334-00.

Interfaced GPS/SBAS Position Source

The Interfaced GPS/SBAS Position Source subsection describes the GPS position source(s) used by the GTX transponder(s). Mark the boxes as described for GPS #1, and for GPS #2 if dual GPS sources are interfaced to the transponder(s).

[1] Internal
[2] GTN 6XX/7XX series
[3] GNS 400W/500W series
[4] GNS 480
[5] GIA 63
[6] GDL 88 (GTX 330 only)
[7] GPS 175/GNC 355

Mark box [1] if the installed transponder(s) P/N is 011-03300-4( ), 011-03301-40, 011-03302-4( ), 011-03302-6( ) or 011-03303-4( ), and the Internal GPS source is configured.

Mark box [2] if the installed transponder(s) is interfaced with a GTN 6XX/7XX input per Appendix C and Appendix B of this manual.

Mark box [3] if the installed transponder(s) is interfaced with a GNS 400W/500W input per Appendix C and Appendix B of this manual.

Mark box [4] if the installed transponder(s) is interfaced with a GNS 480 input per Appendix C and Appendix B of this manual.

Mark box [5] if the installed transponder(s) is interfaced with a GIA 63 input per Appendix C and Appendix B of this manual.

Mark box [6] if the installed GTX 330 transponder(s) is interfaced with a GDL 88 with GPS input per Appendix C and Appendix B of this manual.

Mark box [7] if the installed transponder(s) is interfaced with a GPS 175 or GNC 355 input per Appendix C and Appendix B of this manual.

Interfaced Pressure Altitude Source

The Interfaced Pressure Altitude Source subsection describes the altitude source(s) used by the GTX transponder(s). Mark the boxes as described for Pressure Altitude Source #1, and for Pressure Altitude Source #2 if dual Altitude sources are interfaced to the transponder(s).

[1] _____
[2] Garmin Altitude Encoder

Mark box [1] if the installed transponder(s) is interfaced with an external Pressure Altitude Source input per Appendix B and Appendix C of this manual. Write the manufacturer and model of the interfaced source in the space provided.

Mark box [2] if the installed transponder(s) is configured to utilize Pressure Altitude from the optional Garmin Altitude Encoder.

Interfaced Remote Control Display

The Interfaced Remote Control Display subsection describes the display that is interfaced to provide control function for remotely mounted transponders. Mark the boxes as described for Transponder #1, and for Transponder #2 if a dual installation was performed.

[1] GTN 6XX/7XX

[2] GNS 480

[3] G950/G1000 Display

[4] Gables 7534 Controller

[5] Gables 7614

[6] CTL-92 Controller

[7] CTL-92E Controller

Mark box [1] if the installed transponder is interfaced with a GTN 6XX/7XX per Appendix B and Appendix C of this manual.

Mark box [2] if the installed transponder is interfaced with a GNS 480 per Appendix B and Appendix C of this manual.

Mark box [3] if the installed transponder is interfaced with a G950/G1000 system per Appendix B and Appendix C of this manual.

Mark box [4] if the installed transponder is interfaced with a Gables Model 7534 Transponder Controller per Appendix B and Appendix C of this manual.

Mark box [5] if the installed transponder is interfaced with a Gables Model 7614 Transponder Controller per Appendix B and Appendix C of this manual.

Mark box [6] if the installed transponder is interfaced with a CTL-92 Transponder Controller per Appendix B and Appendix C of this manual.

Mark box [7] if the installed transponder is interfaced with a CTL-92E Transponder Controller per Appendix B and Appendix C of this manual.

Interfaced Active Traffic System

The Interfaced Active Traffic System subsection describes the traffic system that is interfaced to the GTX for traffic correlation. Mark the boxes as described.

[1] None

[2] TCAD

[3] TAS/TCAS

Mark box [1] if the installed transponder is not interfaced with an active traffic system.

Mark box [2] if the installed transponder is interfaced with a 9900BX per Appendix C and Figure B-39 of this manual.

Mark box [3] if the installed transponder is interfaced with a Garmin GTS, Honeywell KMH/KTA, or L-3 Skywatch traffic system per Appendix C and Figure B-39 of this manual.

9.2 Airplane Flight Manual Supplement

Ensure that the Airplane Flight Manual Supplement (AFMS) is completed and inserted into the Airplane Flight Manual (AFM) or Pilot's Operating Handbook (POH).

1. Fill in the required airplane information in the AFMS.
2. Fill in the appropriate check boxes in the Installation Configuration section of the AFMS.
3. Insert the completed AFMS into the AFM or POH.

9.2.1 Configuration and Checkout Log

NOTE

A checkout log must be completed for each unit in a dual GTX installation.

The configuration log sheet contained in Appendix A of *GTX 33X and GTX 3X5 ADS-B Maintenance Manual* should be completed during the initial installation and maintained with the aircraft permanent records.

1. Fill in the General Information for the aircraft and GTX transponders.
2. Calculate and record the change in electrical load.
3. List the equipment interfaced to the GTX transponder.
4. Complete the wire routing diagram that is appropriate for the type of aircraft.
5. Complete the post-installation configuration log that is appropriate for the GTX transponder type.
6. Create new wiring diagrams indicative of the installation or markup the interconnect diagrams from the STC Installation Manual detailing which equipment was installed and how it was connected.

9.2.2 Instructions for Continued Airworthiness

Make sure that the appropriate information is completed in the Instructions for Continued Airworthiness (ICA), the GTX 33/330, and GTX 3X5 ADS-B Out Maintenance Manual. Ensure it is completed and inserted into the aircraft permanent records.

Fill out the Configuration and Checkout Log provided in Appendix A of the Maintenance Manual.

Insert the Instructions for Continued Airworthiness and Appendix A of the Maintenance Manual into the aircraft permanent records.

9.3 Weight and Balance

Follow the guidelines in AC 43.13-1B, Chapter 10, Section 2, as applicable to complete the weight and balance. Make entries in the Equipment List indicating items added, removed, or relocated, along with the date accomplished. Include your name and certificate number in the aircraft records.

Table 9-1 identifies the installed weight of the equipment. Refer to Appendix A for equipment center of gravity (CG) dimensions. For example weight and balance data, refer to Table 9-2. Weights shown include the unit, mounting rack, backplate, and connector.

Table 9-1 Weight of GTX Configurations

Items	Weight		Dimensions and CG
	lbs	kg	
GTX 33, remote mount	4.4	2.00	Refer to Figure
GTX 33D, remote mount	4.7	2.13	
GTX 330, panel mount	4.2	1.91	Refer to Figure A-3
GTX 330D, panel mount	4.3	1.95	
GTX 335, panel mount	2.73	1.24	Refer to Figure A-5
GTX 335, GPS, panel mount	2.87	1.30	
GTX 345, panel mount	3.12	1.41	
GTX 345, GPS, panel mount	3.22	1.46	
GTX 335R, standard remote mount	2.54	1.15	Refer to Figure A-7
GTX 335R, GPS, standard remote mount	2.68	1.22	
GTX 335R, G1000 remote mount	2.53	1.15	Refer to Figure A-14
GTX 335R, GPS, G1000 remote mount	2.67	1.21	
GTX 345R, standard remote mount	2.91	1.32	
GTX 345R, GPS, standard remote mount	3.01	1.37	
GTX 345R, G1000 remote mount	2.90	1.32	
GTX 345R, GPS, G1000 remote mount	3.01	1.36	
GTX 335R, vertical remote mount	3.0	1.35	Refer to Figure A-10
GTX 335R, GPS, vertical remote mount	3.1	1.42	
GTX 345R, vertical remote mount	3.3	1.51	
GTX 345R, GPS, vertical remote mount	3.5	1.57	

Table 9-2 Example Weight and Balance Calculation

Previous Aircraft Weight and Balance Calculated (date)	**Useful Load (lbs.)**	**Empty Weight (lbs.)**	**C.G. (in)**	**Moment**
	1093.30	2306.70	138.83	320,239
Description of items removed from aircraft		Weight (lbs.)	Arm (in)	Moment
KT 76C Unit/Rack		2.61	55.00	143.55
Total removed		-2.61	55.00	-143.55
Description of items added to aircraft		**Weight (lbs.)**	**Arm (in)**	**Moment**
GTX 330 Unit/Rack/Connector		4.2	55.00	231.00
Total added		4.2	55.00	231.00
Change		1.59	55.00	87.45
New Aircraft Weight and Balance (date)	**Useful Load (lbs.)**	**Weight (lbs.)**	**C.G. (in)**	**Moment**
	1092.74	2308.29	138.77	320,327

10 CONNECTOR PINOUT

10.1 GTX 33/330 10-2
10.1.1 GTX 33/330 (J3301) 10-2
10.1.2 GTX 33/330 Power and Lighting Inputs 10-4
10.1.3 GTX 33/330 Temperature Inputs 10-5
10.1.4 GTX 33/330 Encoded Altitude Inputs 10-5
10.1.5 GTX 33/330 Discrete Outputs 10-5
10.1.6 GTX 33/330 Discrete Inputs 10-6
10.2 GTX 3X5 10-7
10.2.1 GTX 335/335R/345/345R (J3251) 10-7
10.2.2 GTX 345/345R (J3252) 10-9
10.2.3 GTX 3X5 Power and Lighting Inputs 10-10
10.2.4 GTX 3X5 Power Control Input 10-10
10.2.5 GTX 3X5 Encoded Altitude Inputs 10-11
10.2.6 GTX 3X5 Discrete Outputs 10-12
10.2.7 GTX 3X5 Discrete Inputs 10-13

NOTE

The information in this section is used to select interfaces and function capabilities. It is not to be used to find other manufacturer's interfaced component requirements. Refer to interfaced equipment manufacturer's installation manuals for equipment-specific requirements.

10.1 GTX 33/330

This section provides pin functions, inputs, and outputs of the GTX 33/330 series transponders.

10.1.1 GTX 33/330 (J3301)

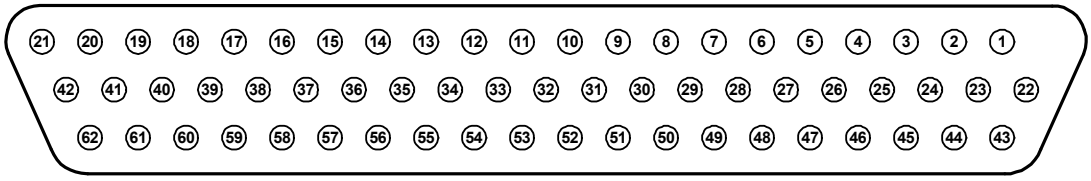

Figure 10-1 Rear View, Connector P3301

Table 10-1 GTX 33/330 J3301 Pin Assignments

Pin	Pin Name	I/O
1	RESERVED	IN
2	ALTITUDE A1	IN
3	ALTITUDE C2	IN
4	ALTITUDE A2	IN
5	ALTITUDE A4	IN
6	ALTITUDE C4	IN
7	ALTITUDE B1	IN
8	ALTITUDE C1	IN
9	ALTITUDE B2	IN
10	ALTITUDE B4	IN
11	ALTITUDE D4	IN
12	EXTERNAL IDENT SELECT*	IN
13	EXTERNAL STANDBY SELECT*	IN
14	NOT USED	IN
15	AUDIO OUT HI	OUT
16	AUDIO OUT LO	OUT
17	SQUAT SWITCH IN	IN
18	RESERVED	--
19	ALTITUDE ALERT ANNUNCIATE*	OUT
20	RESERVED	--
21	AIRCRAFT POWER 1	IN
22	RS-232 IN 1	IN
23	RS-232 OUT 1	OUT
24	RS-232 IN 2	IN
25	RS-232 OUT 2	OUT
26	ARINC 429 IN 3 A	IN
27	POWER GROUND	--
28	ARINC 429 OUT 2 B	OUT

Pin	Pin Name	I/O
29	ARINC 429 IN 3 B	IN
30	ARINC 429 OUT 2 A	OUT
31	EXTERNAL SUPPRESSION I/O	I/O
32	ARINC 429 IN 1 A	IN
33	ARINC 429 IN 2 A	IN
34	ARINC 429 OUT 1 B	OUT
35	ARINC 429 IN 1 B	IN
36	ARINC 429 IN 2 B	IN
37	ARINC 429 OUT 1 A	OUT
38	RESERVED	--
39	RESERVED	--
40	SPARE	--
41	CURRENT TEMPERATURE PROBE OUT	OUT
42	AIRCRAFT POWER 1	IN
43	POWER GROUND	--
44	CURRENT TEMPERATURE PROBE IN	IN
45	NOT USED	IN
46	TIS CONNECT SELECT*	IN
47	AUDIO MUTE SELECT*	IN
48	ARINC 429 IN 4 A	IN
49	ARINC 429 IN 4 B	IN
50	ALTITUDE COMMON (GROUND)	--
51	SIGNAL GROUND	--
52	RESERVED	--
53	RESERVED	--
54	XPDR REMOTE POWER OFF	IN
55	NOT USED	--
56	AIRCRAFT POWER 2	IN
57	NOT USED	--
58	SIGNAL GROUND	--
59	NOT USED	--
60	AIRCRAFT POWER 2	IN
61	NOT USED	--
62	SWITCHED POWER OUT	OUT

* Denotes an Active-Low (ground to operate)

10.1.2 GTX 33/330 Power and Lighting Inputs

Power and lighting input requirements are recorded in this section. Refer to Appendix B for power and lighting interconnections.

- The power input pins accept 14/28 VDC
- AIRCRAFT POWER 2 is used to connect to a different power source
- SWITCHED POWER OUT is a power source available for a remote digital altitude encoder device
- The GTX 330 is configurable to adjust to a 28 VDC, 14 VDC, or 5 VDC lighting bus
- The GTX 330 automatically adjusts for ambient lighting conditions because of the photocell

Table 10-2 Lighting/Power Pin Assignments

Pin	Pin Name	I/O	GTX Unit
21	AIRCRAFT POWER 1	IN	All
42	AIRCRAFT POWER 1	IN	All
56	AIRCRAFT POWER 2	IN	All
60	AIRCRAFT POWER 2	IN	All
62	SWITCHED POWER OUT	OUT	All
27	POWER GROUND	--	All
43	POWER GROUND	--	All
45	14 V/5 V LIGHTING BUS HI	IN	330/330D Only
14	28 V LIGHTING BUS HI	IN	330/330D Only
51	SIGNAL GROUND	--	33/33D Only
58	SIGNAL GROUND	--	33/33D Only
54	XPDR REMOTE POWER OFF	IN	33/33D Only

10.1.3 GTX 33/330 Temperature Inputs

- Outside Air Temperature (OAT) display and Density Altitude computations use temperature input
- For GTX 33/33D installations, the external display system has the temperature function

Table 10-3 Temperature Probe Pin Assignments

Pin	Pin Name	I/O	Unit
41	CURRENT TEMPERATURE PROBE OUT	OUT	All
44	CURRENT TEMPERATURE PROBE IN	IN	All

10.1.4 GTX 33/330 Encoded Altitude Inputs

Parallel Gray code altitude inputs are active if the voltage to ground is < 1.9 V or the resistance to ground is < 375 Ω. These inputs are inactive if the voltage to ground is 11-33 VDC.

Table 10-4 GTX 33/330 Encoded Altitude Inputs

Pin	Pin Name	I/O	Unit
2	ALTITUDE A1	IN	All
4	ALTITUDE A2	IN	All
5	ALTITUDE A4	IN	All
7	ALTITUDE B1	IN	All
9	ALTITUDE B2	IN	All
10	ALTITUDE B4	IN	All
8	ALTITUDE C1	IN	All
3	ALTITUDE C2	IN	All
6	ALTITUDE C4	IN	All
11	ALTITUDE D4	IN	All
50	ALTITUDE COMMON	--	All

10.1.5 GTX 33/330 Discrete Outputs

Table 10-5 GTX 33/330 Discrete Outputs

Pin	Pin Name	I/O	Unit
19	ALTITUDE ALERT ANNUNCIATE*	OUT	All
31	EXTERNAL SUPPRESSION I/O	I/O	All
* INACTIVE: 11 ≤ Vin ≤ 33 VDC (open) ACTIVE: Vin ≤ 1.9 VDC or Rin ≤ 375 Ω (grounded) Sink current is internally limited to 200 µA max for grounded pin.			

10.1.6 GTX 33/330 Discrete Inputs

Table 10-6 GTX 33/330 Discrete Inputs

Pin	Pin Name	I/O	Unit
1	AVIONICS MASTER ON SELECT	IN	330 Only
12	EXTERNAL IDENT SELECT*	IN	All
13	EXTERNAL STANDBY SELECT*	IN	All
17	SQUAT SWITCH INPUT	IN	All
46	TIS CONNECT SELECT*	IN	All
47	AUDIO MUTE SELECT*	IN	All
* INACTIVE: 11 ≤ Vin ≤ 33 VDC or Rin ≥ 100 KΩ (open) ACTIVE: Vin ≤ 1.9 VDC or Rin ≤ 375 Ω (grounded) Sink current is internally limited to 200 µA max for grounded pin.			

10.2 GTX 3X5

This section provides pin functions, inputs, and outputs of the GTX 3X5 series transponders.

10.2.1 GTX 335/335R/345/345R (J3251)

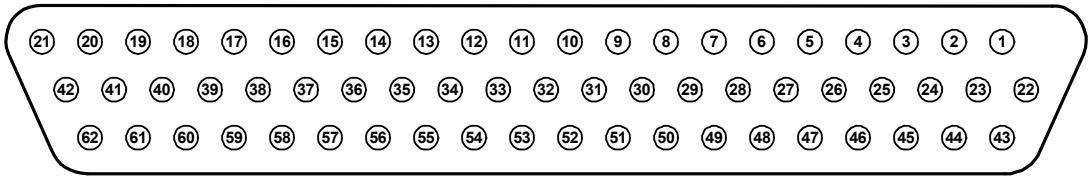

Figure 10-2 Rear View, Connector J3251

Table 10-7 GTX 3X5 J3251 Pin Assignments

Pin	Pin Name	I/O
1	ALT ENCODER/CONFIG MODULE CLOCK	I/O
2	USB DATA HI	I/O
3	TEMP PROBE IN	IN
4	TIME MARK A	OUT
5	ARINC 429 OUT A	OUT
6	ARINC 429 OUT B	OUT
7	RS-232 OUT 3	OUT
8	RS-232 OUT 2	OUT
9	RS-232 OUT 1	OUT
10	ALTITUDE A1	IN
11	ALTITUDE B1	IN
12	ALTITUDE C1	IN
13	ALTITUDE D4	IN
14	EXTERNAL STANDBY SELECT	IN
15	CONFIGURABLE DISCRETE 1	I/O
16	CONFIGURABLE DISCRETE 2	I/O
17	XPDR FAIL 1	OUT
18	EXTERNAL SUPPRESSION	I/O
19	LIGHTING BUS HI	IN
20	AIRCRAFT GROUND	--
21	AIRCRAFT POWER 1	IN
22	ALT ENCODER/CONFIG MODULE DATA	I/O
23	ALT ENCODER/CONFIG MODULE GND	--
24	USB DATA LO	I/O
25	TEMP PROBE OUT	OUT
26	TIME MARK B	OUT

Pin	Pin Name	I/O
27	ARINC 429 IN 1A	IN
28	ARINC 429 IN 1B	IN
29	RS-232 IN 3	IN
30	RS-232 IN 2	IN
31	RS-232 IN 1	IN
32	ALTITUDE A2	IN
33	ALTITUDE B2	IN
34	ALTITUDE C2	IN
35	RESERVED	IN
36	EXTERNAL IDENT SELECT	IN
37	AUDIO INHIBIT 2	IN
38	POWER CONTROL	IN
39	SWITCHED POWER OUT	OUT
40	LIGHTING BUS LO	IN
41	AIRCRAFT GROUND	IN
42	AIRCRAFT POWER 1	IN
43	ALT ENCODER/CONFIG MODULE POWER	IN
44	USB VBUS POWER	I/O
45	USB GND	--
46	AUDIO OUT HI	OUT
47	AUDIO OUT LO	OUT
48	ARINC 429 IN 2A	IN
49	ARINC 429 IN 2B	IN
50	RS-232 GND 3	--
51	RS-232 GND 2	--
52	RS-232 GND 1	--
53	ALTITUDE A4	IN
54	ALTITUDE B4	IN
55	ALTITUDE C4	IN
56	ALTITUDE GROUND	--
57	SQUAT SWITCH	IN
58	AIR DATA SELECT	IN
59	POWER CONFIG	IN
60	GPS KEEP ALIVE	IN
61	AIRCRAFT POWER 2	IN
62	AIRCRAFT POWER 2	IN

10.2.2 GTX 345/345R (J3252)

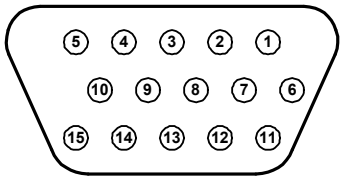

Figure 10-3 Rear View, Connector J3252

Table 10-8 GTX 345 J3252 Pin Assignments

Pin	Pin Name	I/O
1	ETHERNET OUT 1B	OUT
2	ETHERNET IN 1B	IN
3	ETHERNET OUT 2B	OUT
4	ETHERNET IN 2B	IN
5	RS-232 OUT 4	OUT
6	ETHERNET OUT 1A	OUT
7	ETHERNET IN 1A	IN
8	ETHERNET OUT 2A	OUT
9	ETHERNET IN 2A	IN
10	RS-232 IN 4	IN
11	RS-422 A	OUT
12	RS-422 B	OUT
13	CONFIGURABLE DISCRETE 11	I/O
14	CONFIGURABLE DISCRETE 12	I/O
15	RS-232 GND 4	--

10.2.3 GTX 3X5 Power and Lighting Inputs

Power and lighting input requirements are recorded in this section. Refer to Appendix B for power and lighting interconnections.

- The power input pins accept 14/28 VDC
- AIRCRAFT POWER 2 is used to connect to an alternate power source
- SWITCHED POWER OUT is a power source available for a remote digital altitude encoder device
- The GTX 3X5 can adjust to a 28 VDC, 14 VDC, or 5 VDC lighting bus
- The GTX 3X5 automatically adjust for ambient lighting conditions because of the photocell

Table 10-9 Lighting/Power Pin Assignments

P3251 Pin	Pin Name	I/O	GTX Unit
21	AV PWR 1	IN	All
42	AV PWR 1	IN	All
61	AV PWR 2	IN	All
62	AV PWR 2	IN	All
20	GROUND (power ground)	IN	All
41	GROUND (power ground)	IN	All
39	SW PWR OUT	OUT	All
60	GPS KEEP ALIVE	IN	All
19	LTNG HI	IN	Panel Mount
40	LTNG LO [1]	IN	Panel Mount

Notes:

[1] Pin 40 (Lighting Bus Lo) is only used for 5 VAC lighting bus connection. All DC lighting bus connections should only use pin 19 (Lighting Bus Hi), with ground being provided via the GTX 3X5 chassis internally.

10.2.4 GTX 3X5 Power Control Input

PWR CONFIG input sets the remote on/off feature. This is connected to ground for a remote unit installation and not connected for a panel mount unit installation.

PWR CONTROL input is dependent on the PWR CONFIG connection. This is used as a remote power on/off control or to use the power auto-on feature when the avionics master is powered on.

Table 10-10 GTX 3X5 Power Configuration and GTX 3X5 Power Control Inputs

Pin	Pin Name	I/O	Connector
59	PWR CONFIG	IN	P3251
38	PWR CONTROL	IN	P3251

Table 10-11 GTX 3X5 Power Configuration and Power Control Functions

Power Config	Power Control	Unit Type	Description
Open	Open	Panel Mount	Auto on disabled
Open	Ground	Panel Mount	Auto on enabled
Ground	Open	Remote	Power off
Ground	Ground	Remote	Power on

10.2.5 GTX 3X5 Encoded Altitude Inputs

- Parallel Gray code altitude inputs are active if the voltage to ground is < 1.9 V or the resistance to ground is < 375 Ω
- These inputs are inactive if the voltage to ground is 11-33 VDC
- The GTX 3X5 discrete I/O pins are configurable
- If the Gillham input is not used in the configuration menu, then the Gillham code altitude pins can be used for other discrete input functions
- If the Gillham input is used, these pins will not be available for selection on other discrete inputs in the configuration menu

Table 10-12 GTX 3X5 Encoded Altitude Inputs

Pin	Pin Name	I/O	Connector
10	ALTITUDE A1	IN	J3251
32	ALTITUDE A2	IN	J3251
53	ALTITUDE A4	IN	J3251
11	ALTITUDE B1	IN	J3251
33	ALTITUDE B2	IN	J3251
54	ALTITUDE B4	IN	J3251
12	ALTITUDE C1	IN	J3251
34	ALTITUDE C2	IN	J3251
55	ALTITUDE C4	IN	J3251
13	ALTITUDE D4	IN	J3251
56	ALTITUDE COMMON	--	J3251

10.2.6 GTX 3X5 Discrete Outputs

Table 10-13 GTX 3X5 Discrete Outputs

Pin	Pin Name	Unit	I/O	Connector
17	TRANSPONDER FAIL #1	All	OUT	J3251
18	EXTERNAL SUPPRESSION I/O	All	I/O	J3251
X**	REPLY ACTIVE	All	OUT	J3251/J3252
X**	TRANSPONDER FAIL #2	All	OUT	J3251/J3252
X**	ALTITUDE ALERT ANNUNCIATE*	All	OUT	J3251/J3252
X**	EQUIPMENT STATUS	All	OUT	J3251/J3252
X**	ADS-B OUT FUNCTION	All	OUT	J3251/J3252
X**	TRAFFIC ALERT	GTX 345/345R	OUT	J3251/J3252
15, 16, or 17	TRAFFIC STANDBY/OPERATE	GTX 345/345R	OUT	J3251
15, 16, or 17	TRAFFIC TEST	GTX 345/345R	OUT	J3251
X**	TCAD SL	GTX 345/345R	OUT	J3251/J3252

* INACTIVE: 10 ≤ Vin ≤ 33 VDC or Rin ≥ 100 KΩ (open)
ACTIVE: Vin ≤ 1.9 VDC with ≥ 75 µA sink current or Rin ≤ 375 Ω (grounded)
Sink current is internally limited to 200 µA max for grounded pin.

** X denotes that this discrete output can be used by any available configurable discrete output pin on the indicated connector(s). Refer to Section 10.1.5 for a list of configurable pins.

Table 10-14 GTX 3X5 Configurable Discrete Output Pins

Pin	Pin Name	Unit	I/O	Connector
17	TRANSPONDER FAIL #1	All	OUT	J3251
15	CONFIGURABLE DISCRETE #1	All	I/O	J3251
16	CONFIGURABLE DISCRETE #2	All	I/O	J3251
13	CONFIGURABLE DISCRETE #11	GTX 345/345R	I/O	J3252
14	CONFIGURABLE DISCRETE #12	GTX 345/345R	I/O	J3252

10.2.7 GTX 3X5 Discrete Inputs

Table 10-15 GTX 3X5 Discrete Inputs

Pin	Pin Name	Unit	I/O	Connector
X**	TIS-A SELECT*	GTX 335/335R	IN	J3251/J3252
X**	ALTITUDE DATA SELECT*	All	IN	J3251/J3252
X**	AUDIO INHIBIT #1*	All	IN	J3251/J3252
37	AUDIO INHIBIT #2*	All	IN	J3251
58	AIR DATA SELECT*	All	IN	J3251
57	SQUAT SWITCH	All	IN	J3251
36	EXTERNAL IDENT*	All	IN	J3251
14	EXTERNAL STANDBY*	All	IN	J3251
18	EXTERNAL SUPPRESSION I/O	All	I/O	J3251
X**	ID SELECT	All	IN	J3251/J3252

* INACTIVE: 10 ≤ Vin ≤ 33 VDC or Rin ≥ 100 KΩ (open)
ACTIVE: Vin ≤ 1.9 VDC with ≥ 75 µA sink current or Rin ≤ 375 Ω (grounded)
Sink current is internally limited to 200 µA max for grounded pin.
** X denotes that this discrete output can be used by any available configurable discrete output pin on the indicated connector(s). Refer to Section 10.1.5 for a list of configurable pins.

Table 10-16 GTX 3X5 Configurable Discrete Input Pins

Pin	Pin Name	Unit	I/O	Connector
37	AUDIO INHIBIT #2*	All	IN	J3251
58	AIR DATA SELECT*	All	IN	J3251
57	SQUAT SWITCH	All	IN	J3251
36	EXTERNAL IDENT*	All	IN	J3251
14	EXTERNAL STANDBY*	All	IN	J3251
15	CONFIGURABLE DISCRETE #1	All	I/O	J3251
16	CONFIGURABLE DISCRETE #2	All	I/O	J3251
13	CONFIGURABLE DISCRETE #11	GTX 345/345R	I/O	J3252
14	CONFIGURABLE DISCRETE #12	GTX 345/345R	I/O	J3252

11 TROUBLESHOOTING

GTX GENERAL FAULTS
Figure 11-1 GTX General Faults/Failures 11-2

GTX 330 FAILURES
Figure 11-2 GTX 330 Failure Messages 11-3

GTX 33 FAILURES
Figure 11-3 GTX 33 Failure Messages 11-4

GTX 3X5 FAULTS AND FAILURES
Figure 11-4 GTX 3X5 Failure Messages 11-5
Figure 11-5 GTX 3X5 Alerts, Warnings, and Faults 11-7

GTX 3X5 WITH G1000
Figure 11-6 GTX 3X5 G1000 Messages 11-10

GTX GENERAL FAULTS

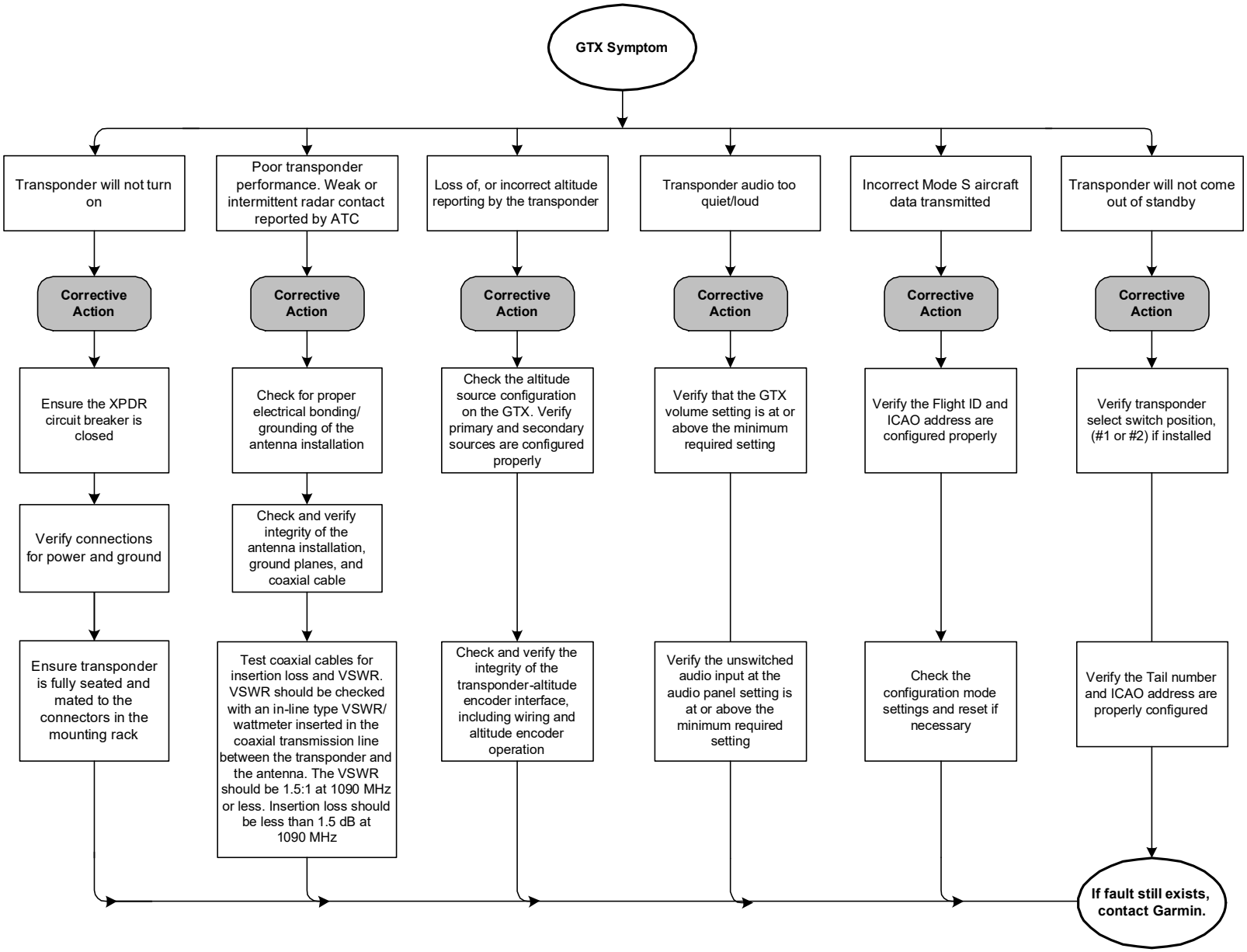

Figure 11-1 GTX General Faults/Failures

GTX 330 FAILURES

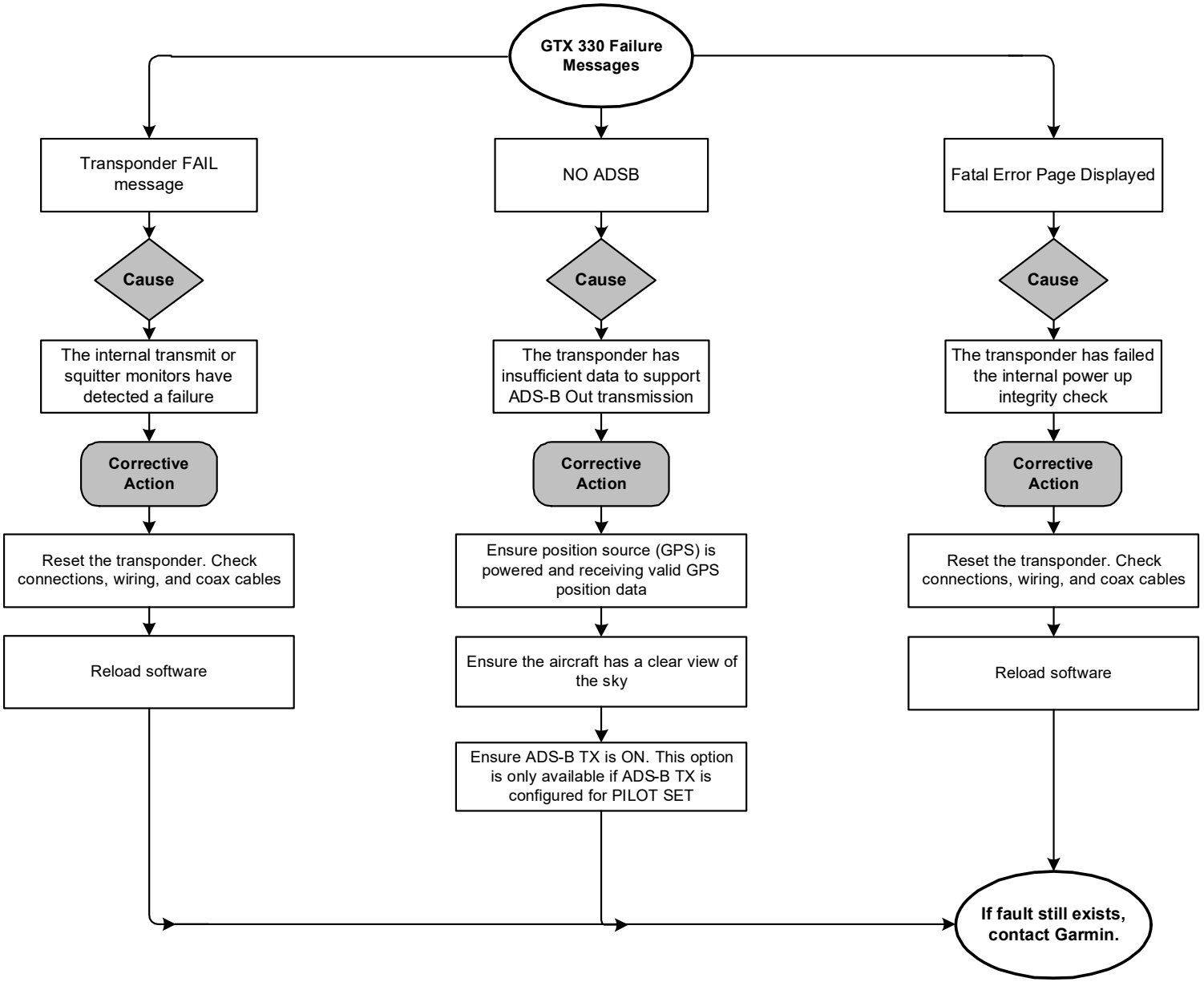

Figure 11-2 GTX 330 Failure Messages

~~GTX 33 FAILURES~~

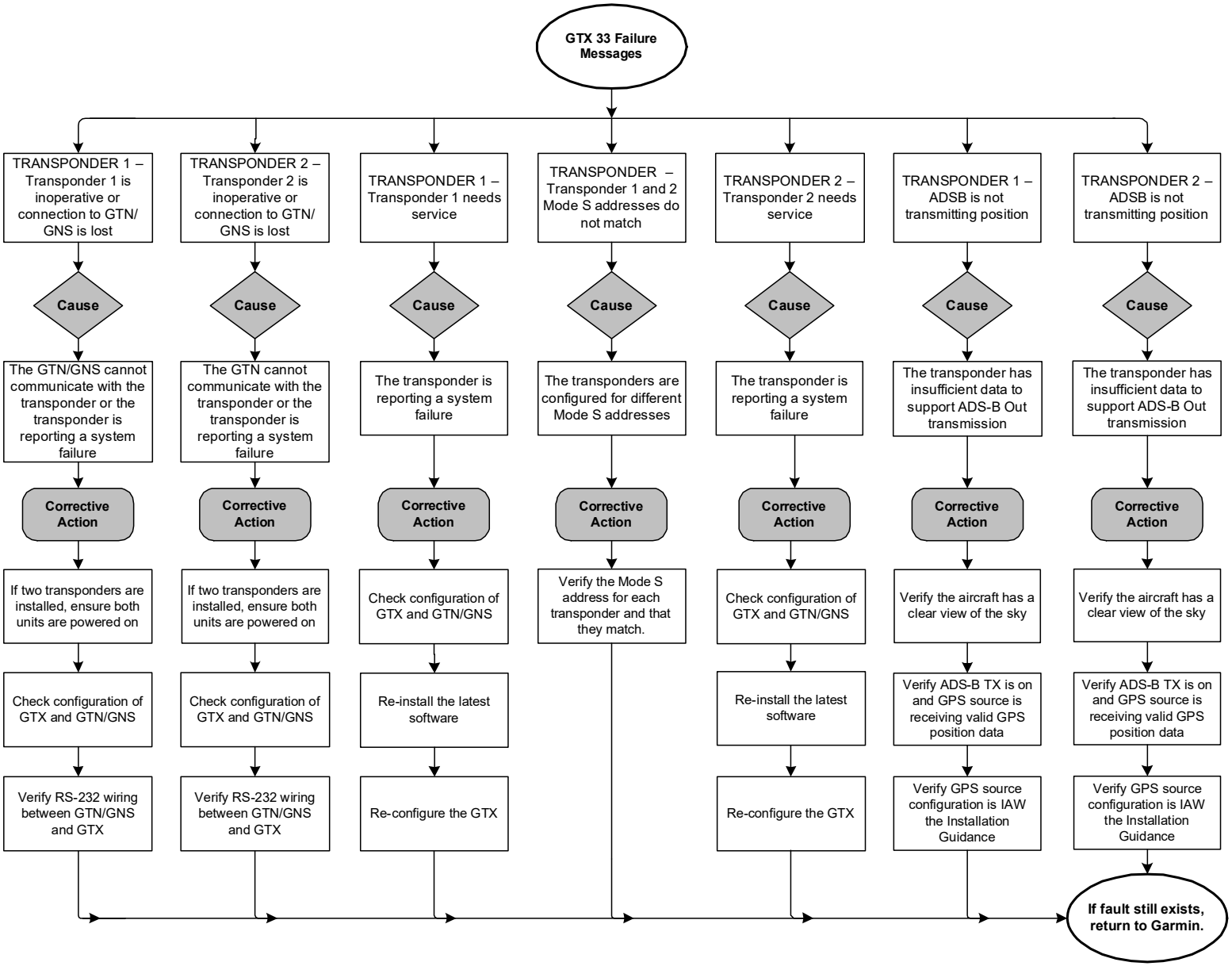

Figure 11-3 GTX 33 Failure Messages

GTX 3X5 FAULTS AND FAILURES

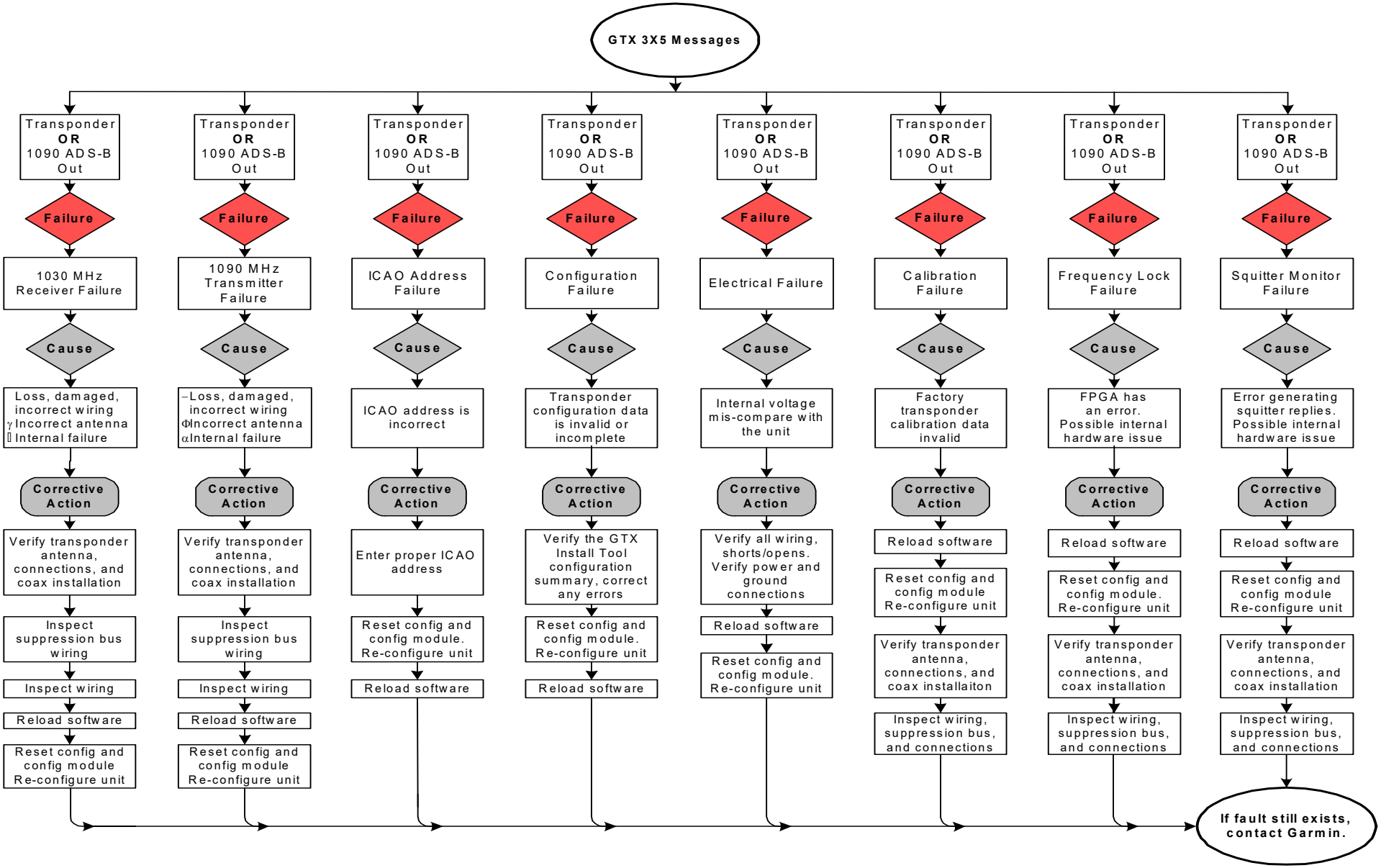

Figure 11-4 GTX 3X5 Failure Messages
Sheet 1 of 2

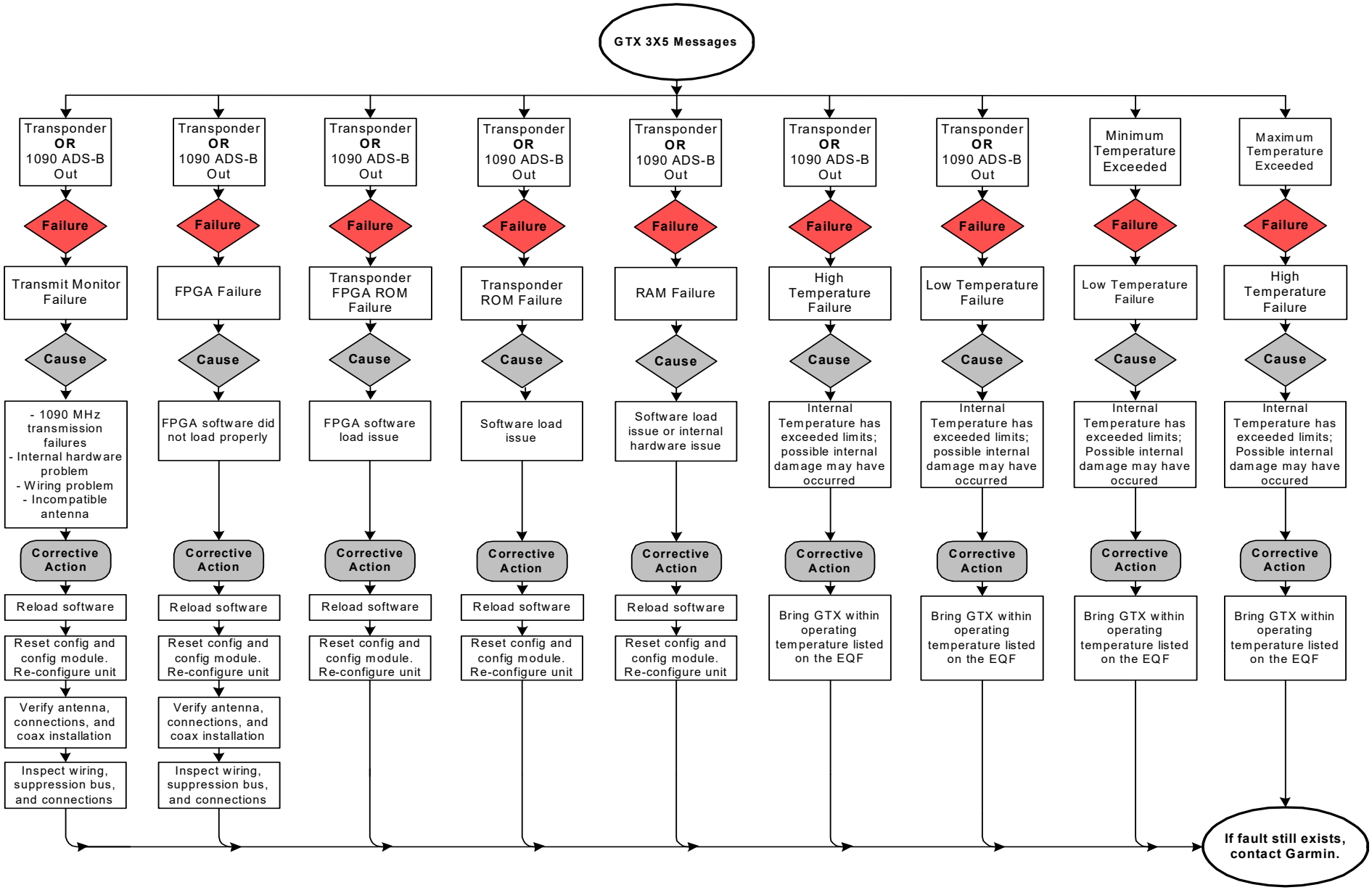

~~Figure 11-4 GTX 3X5 Failure Messages~~
Sheet 2 of 2

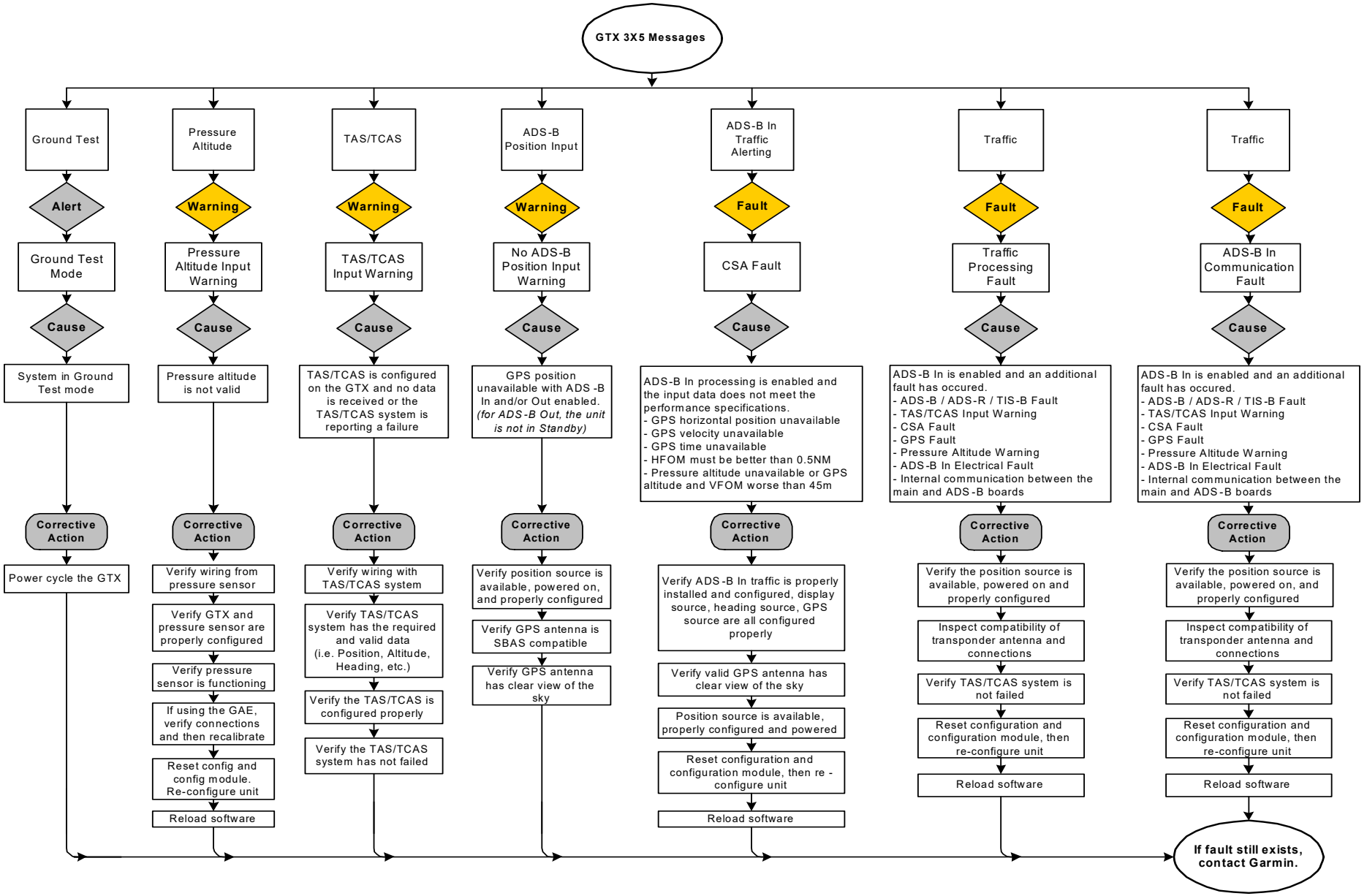

~~Figure 11-5 GTX 3X5 Alerts, Warnings, and Faults~~
Sheet 1 of 3

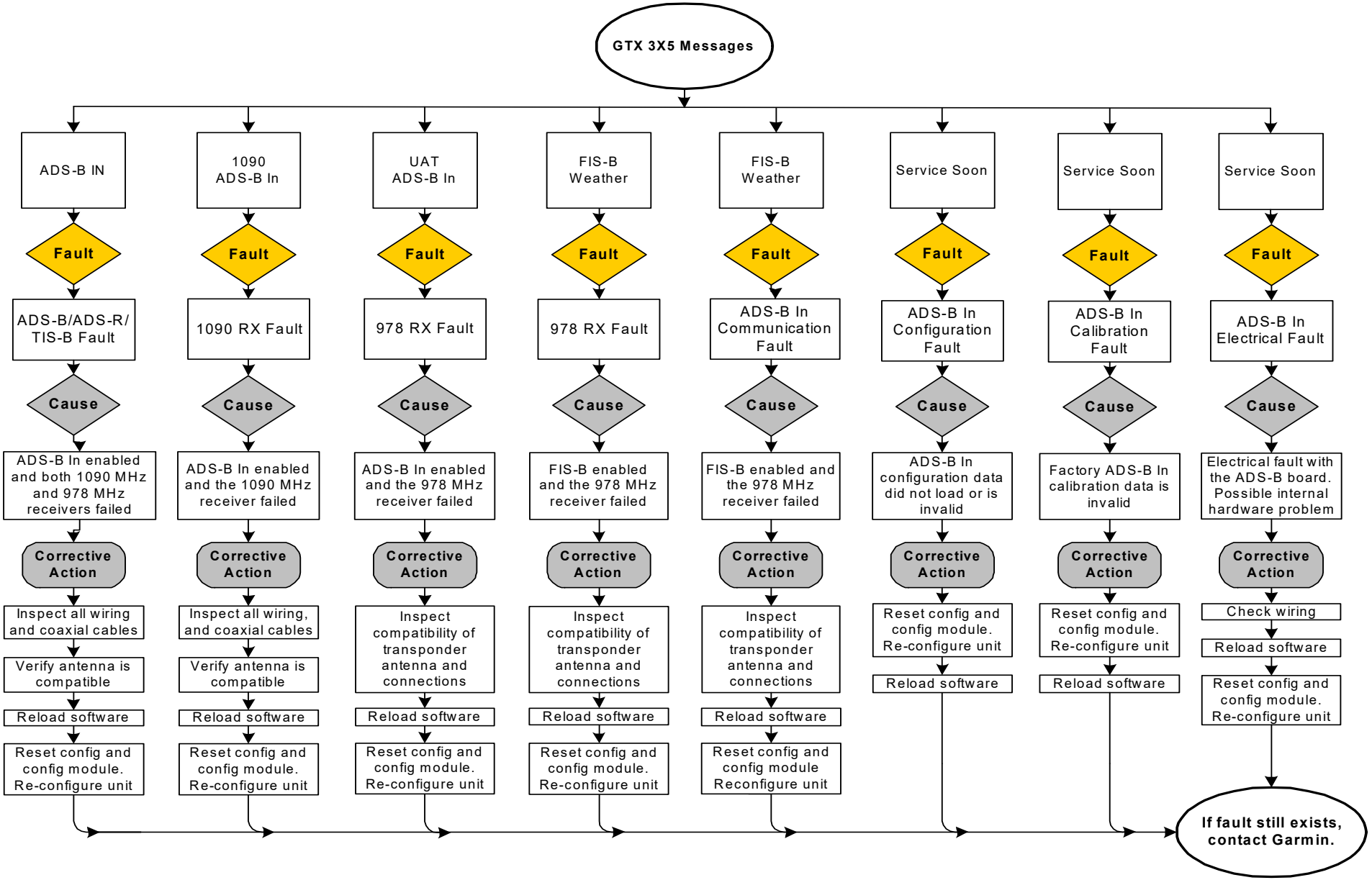

~~Figure 11-5 GTX 3X5 Alerts, Warnings, and Faults~~
Sheet 2 of 3

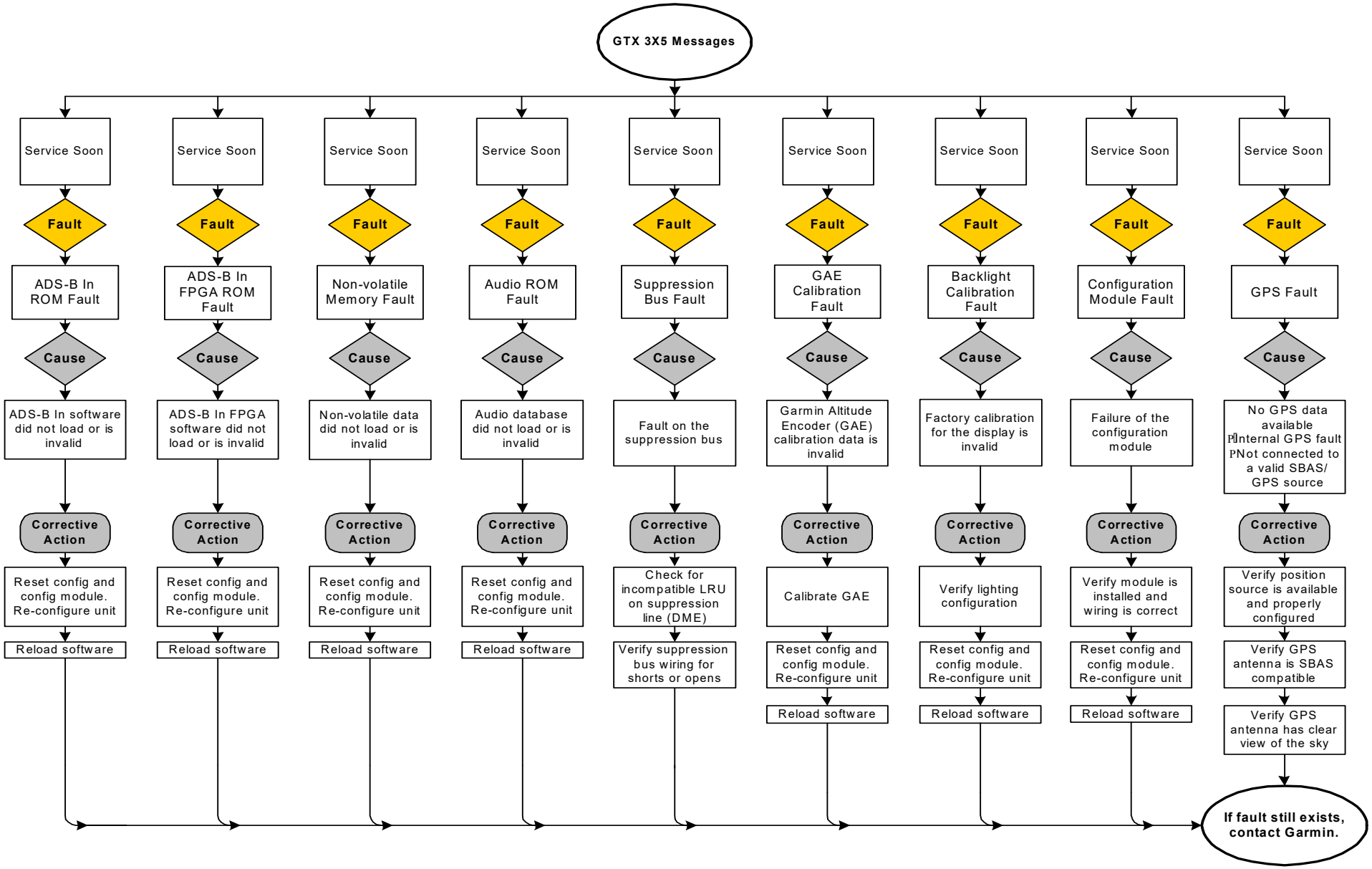

~~Figure 11-5 GTX 3X5 Alerts, Warnings, and Faults~~
Sheet 3 of 3

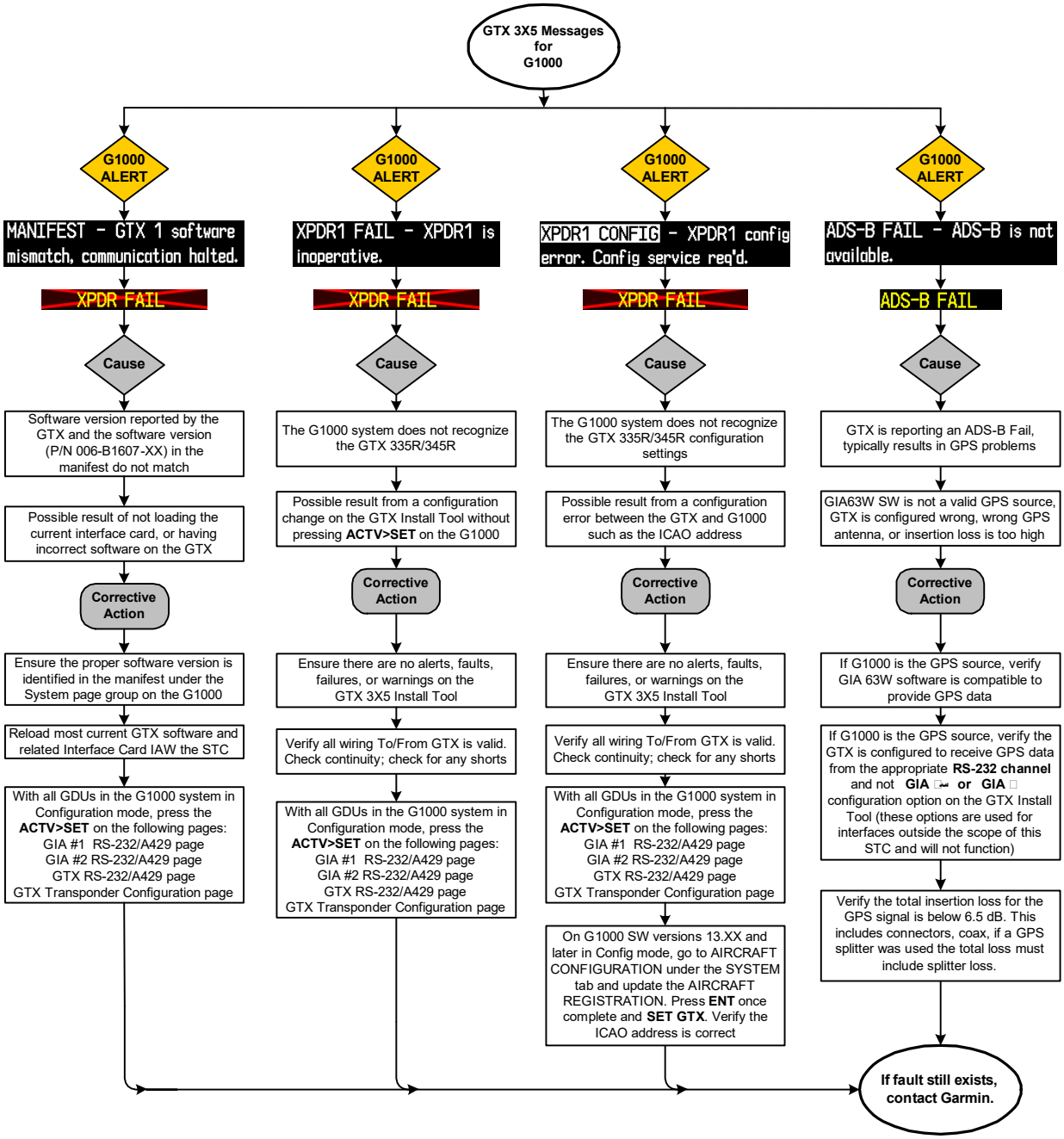

~~Figure 11-6 GTX 3X5 G1000 Messages~~
Sheet 1 of 2

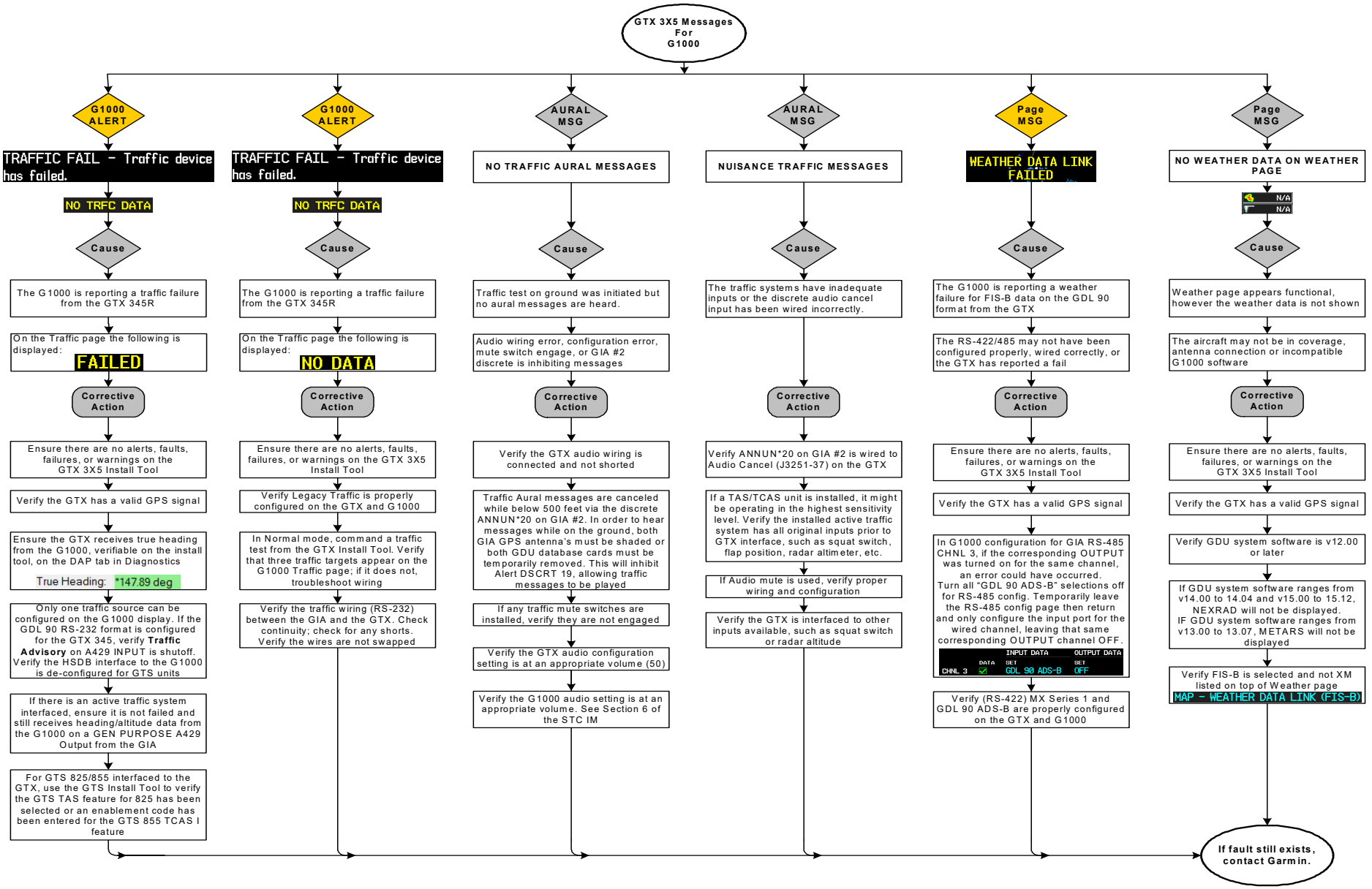

~~Figure 11-6 GTX 3X5 G1000 Messages~~
Sheet 2 of 2

APPENDIX A DRAWINGS

GTX 33/330

Figure A-1 Typical GTX 33/33D Dimensions and Center of Gravity A-2
Figure A-2 GTX 33/33D Mounting Rack/Connector Assembly A-3
Figure A-3 Typical GTX 330 Dimensions and Center of Gravity A-4
Figure A-4 GTX 330 Mounting Rack Assembly A-5

GTX 3X5

Figure A-5 Typical GTX 3X5 Panel Mount Dimensions and Center of Gravity A-6
Figure A-6 GTX 3X5 Panel Mount Rack Assembly A-7
Figure A-7 Typical GTX 3X5 Horizontal Remote Mount Dimensions and Center of Gravity A-9
Figure A-8 GTX 3X5 Horizontal Remote Mount Rack Assembly A-10
Figure A-9 Typical GTX 3X5 Vertical Mount Dimensions and Center of Gravity A-12
Figure A-10 GTX 3X5 Vertical Mount Assembly A-13
Figure A-11 GTX 3X5 Connector and Vent Location A-15
Figure A-12 Optional Altitude Sensor A-16

GTX 3X5 WITH G1000

Figure A-13 Typical GTX 3X5 G1000 Remote Mount Dimensions and Center of Gravity A-17
Figure A-14 GTX 3X5 G1000 Remote Mount Assembly A-18

GTX 33/330

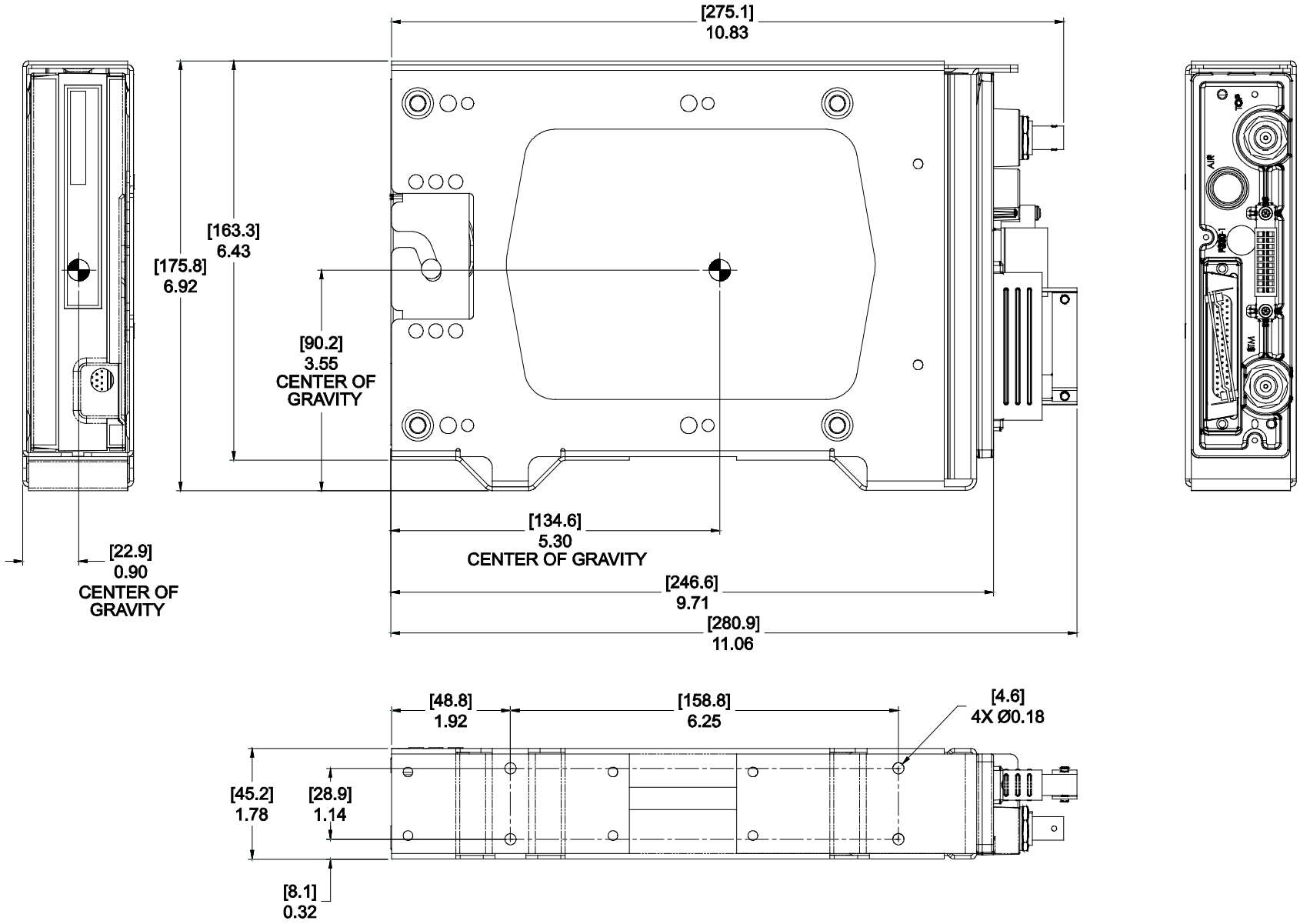

~~Figure A-1 Typical GTX 33/33D Dimensions and Center of Gravity~~

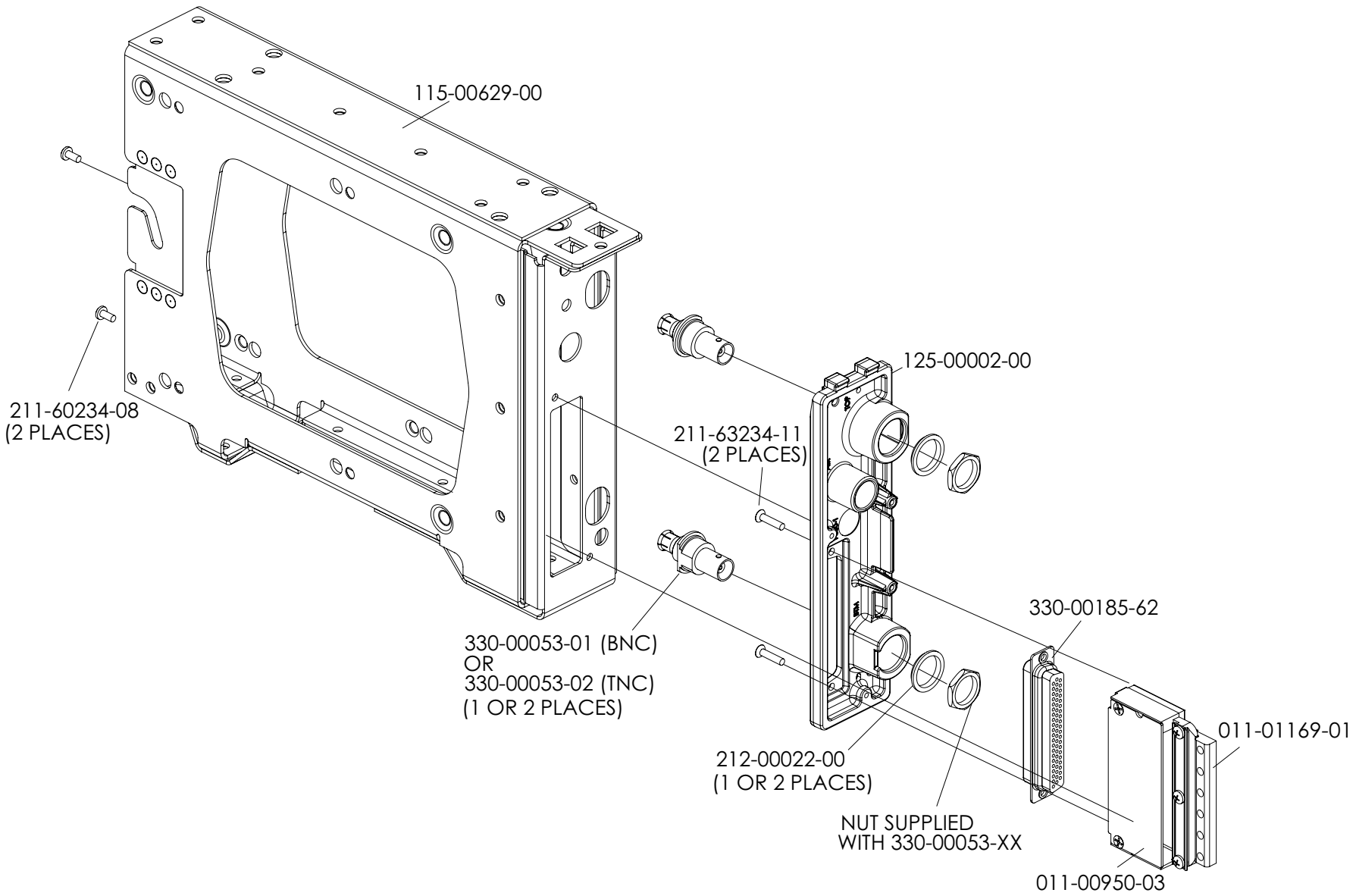

~~Figure A-2 GTX 33/33D Mounting Rack/Connector Assembly~~

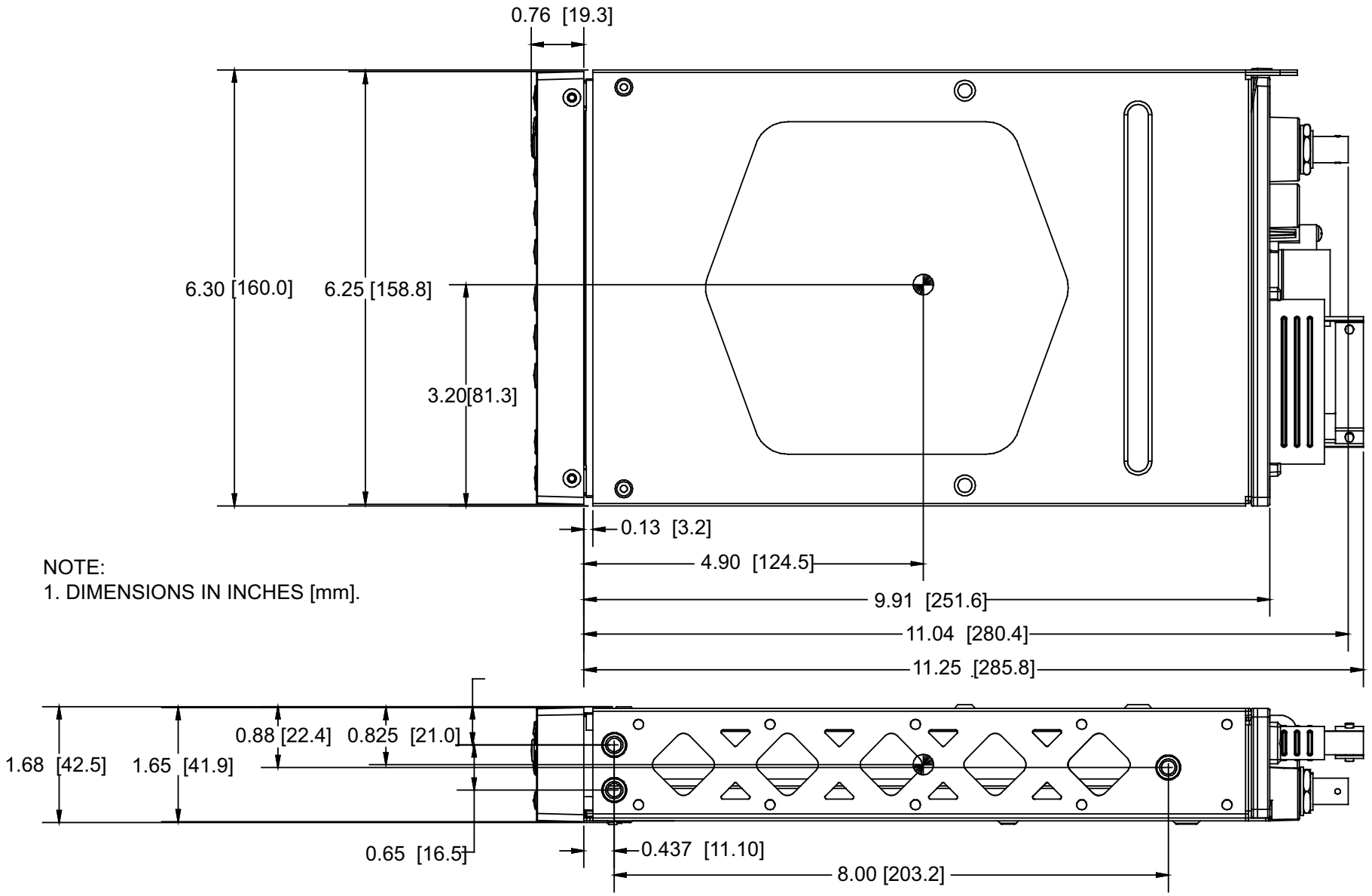

Figure A-3 Typical GTX 330 Dimensions and Center of Gravity

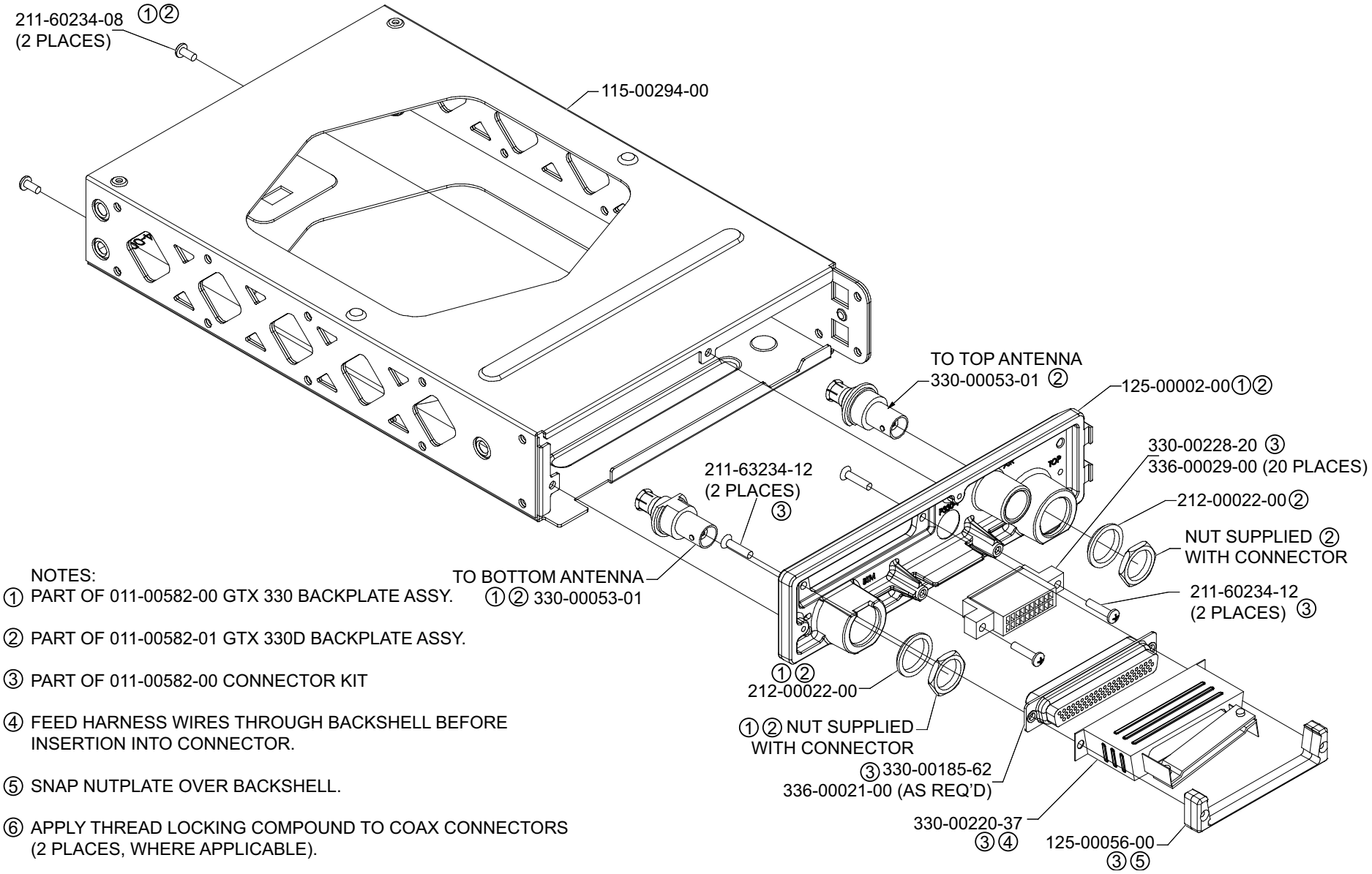

NOTES:

① PART OF 011-00582-00 GTX 330 BACKPLATE ASSY.

② PART OF 011-00582-01 GTX 330D BACKPLATE ASSY.

③ PART OF 011-00582-00 CONNECTOR KIT

④ FEED HARNESS WIRES THROUGH BACKSHELL BEFORE INSERTION INTO CONNECTOR.

⑤ SNAP NUTPLATE OVER BACKSHELL.

⑥ APPLY THREAD LOCKING COMPOUND TO COAX CONNECTORS (2 PLACES, WHERE APPLICABLE).

Figure A-4 GTX 330 Mounting Rack Assembly

GTX 3X5

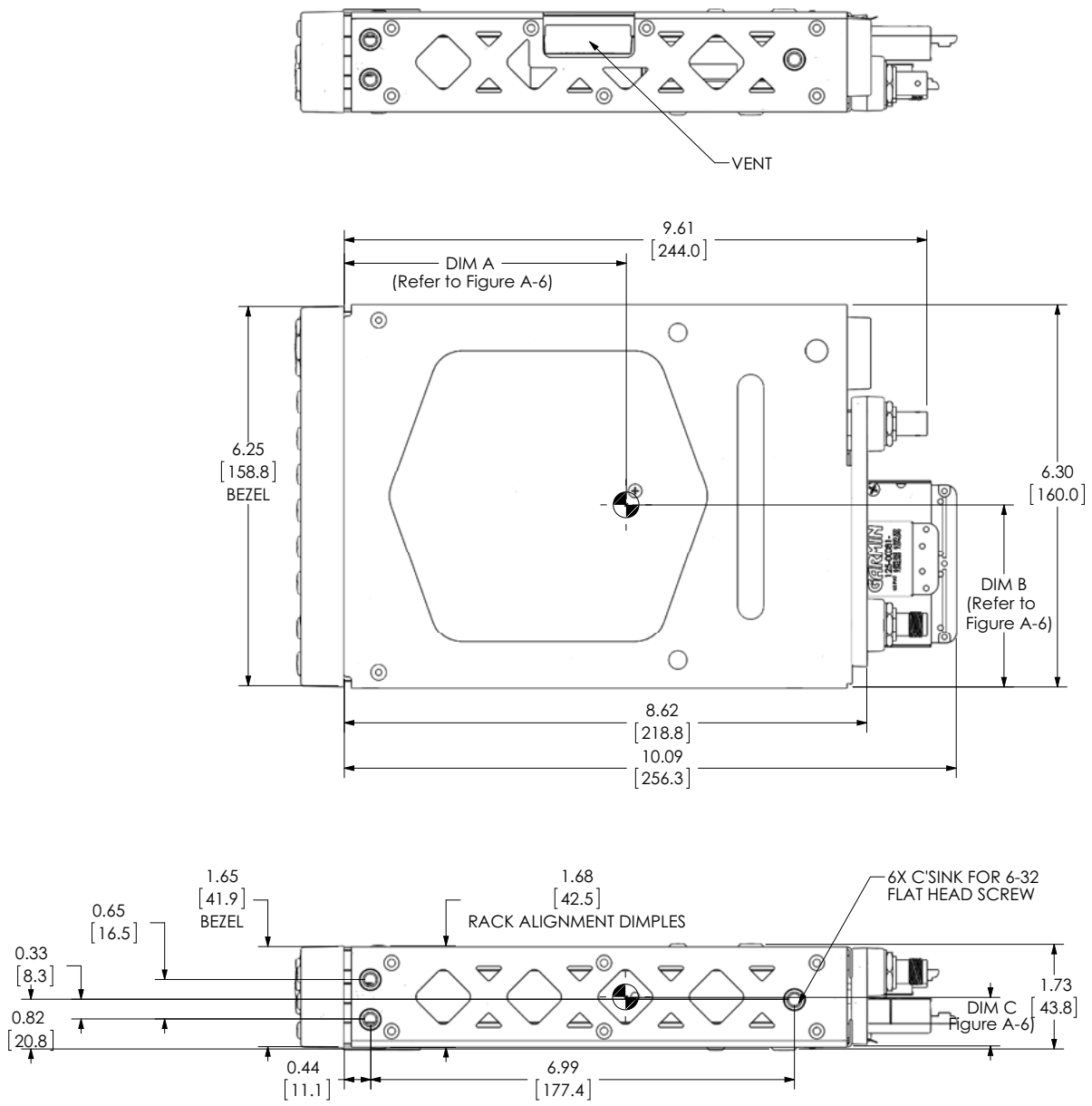

Figure A-5 Typical GTX 3X5 Panel Mount Dimensions and Center of Gravity

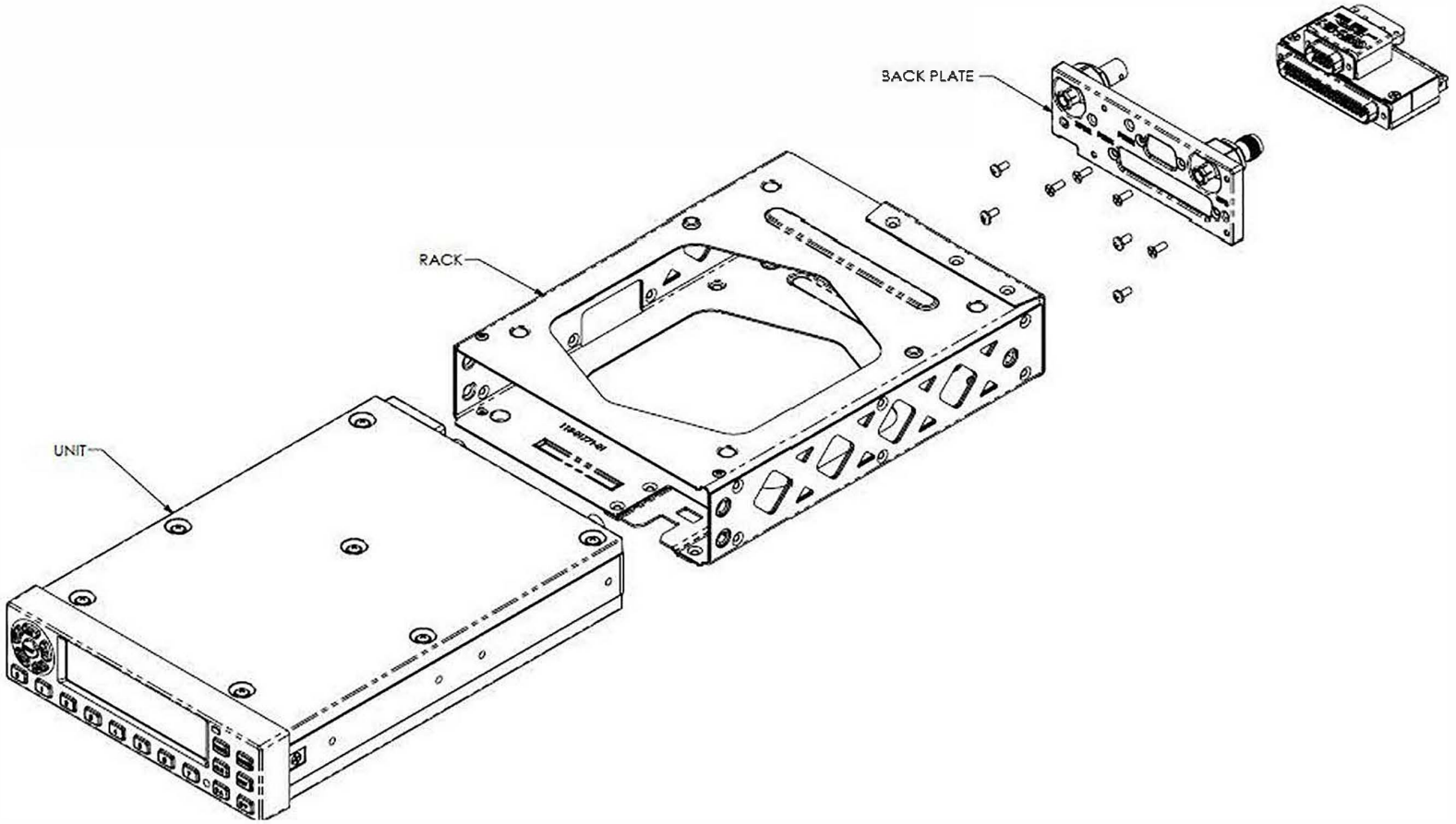

~~Figure A-6 GTX 3X5 Panel Mount Rack Assembly~~

Table A-1 Part Numbers (Panel Mount)

Standard Kit	Unit P/N	Unit Description	Conn Kit	Config Module	Rack [1]	Backplate Assembly	Mount Type	DIM A - in (mm)	DIM B - in (mm)	DIM C - in (mm)
010-01083-01	011-02974-00	Sub-Assy, GTX 325, BLK	011-02977-00	011-00979-03	011-01771-01	011-02976-00	Panel	4.5 (114)	3.2 (81)	0.8 (20)
010-01214-01	011-03300-00	Sub-Assy, GTX 335	011-02977-00	011-00979-03	011-01771-01	011-02976-00	Panel	4.5 (114)	3.2 (81)	0.8 (20)
010-01214-21	011-03300-20	Sub-Assy, GTX 335, NV	011-02977-00	011-00979-03	011-01771-01	011-02976-00	Panel	4.5 (114)	3.2 (81)	0.8 (20)
010-01214-41	011-03300-40	Sub-Assy, GTX 335, GPS	011-02977-00	011-00979-03	011-01771-01	011-02976-01	Panel	4.5 (114)	3.2 (81)	0.8 (20)
010-01214-43	011-03300-41		011-02977-00	011-00979-03	011-01771-01	011-02976-01	Panel	4.5 (114)	3.2 (81)	0.8 (20)
010-01773-01	011-04331-00	Sub-Assy, GTX 335D	011-02977-00	011-00979-03	011-01771-01	011-04340-00	Panel	4.6 (118)	3.2 (81)	0.8 (21)
010-01216-01	011-03302-00	Sub-Assy, GTX 345	011-02977-01	011-00979-03	011-01771-01	011-02976-00	Panel	4.7 (119)	3.0 (76)	0.8 (20)
010-01216-06	011-03302-01		011-02977-01	011-00979-03	011-01771-01	011-02976-00	Panel	4.7 (119)	3.0 (76)	0.8 (20)
010-01216-08	011-03302-02		011-02977-01	011-00979-03	011-01771-01	011-02976-00	Panel	4.7 (119)	3.0 (76)	0.8 (20)
010-01216-21	011-03302-20	Sub-Assy, GTX 345, NV	011-02977-01	011-00979-03	011-01771-01	011-02976-00	Panel	4.7 (119)	3.0 (76)	0.8 (20)
010-01216-26	011-03302-21		011-02977-01	011-00979-03	011-01771-01	011-02976-00	Panel	4.7 (119)	3.0 (76)	0.8 (20)
010-01216-41	011-03302-40	Sub-Assy, GTX 345, GPS	011-02977-01	011-00979-03	011-01771-01	011-02976-01	Panel	4.6 (117)	3.0 (76)	0.8 (20)
010-01216-46	011-03302-41		011-02977-01	011-00979-03	011-01771-01	011-02976-01	Panel	4.6 (117)	3.0 (76)	0.8 (20)
010-01216-61	011-03302-60	Sub-Assy, GTX 345, NV, GPS	011-02977-01	011-00979-03	011-01771-01	011-02976-01	Panel	4.6 (117)	3.0 (76)	0.8 (20)
010-01216-66	011-03302-61		011-02977-01	011-00979-03	011-01771-01	011-02976-01	Panel	4.6 (117)	3.0 (76)	0.8 (20)
010-01775-01	011-04333-00	Sub-Assy, GTX 345D	011-02977-01	011-00979-03	011-01771-01	011-04340-00	Panel	4.6 (118)	3.2 (81)	0.8 (19)

Notes:

[1] The standard rack (P/N 115-01771-01) is functionally equivalent to P/N 115-01771-00.

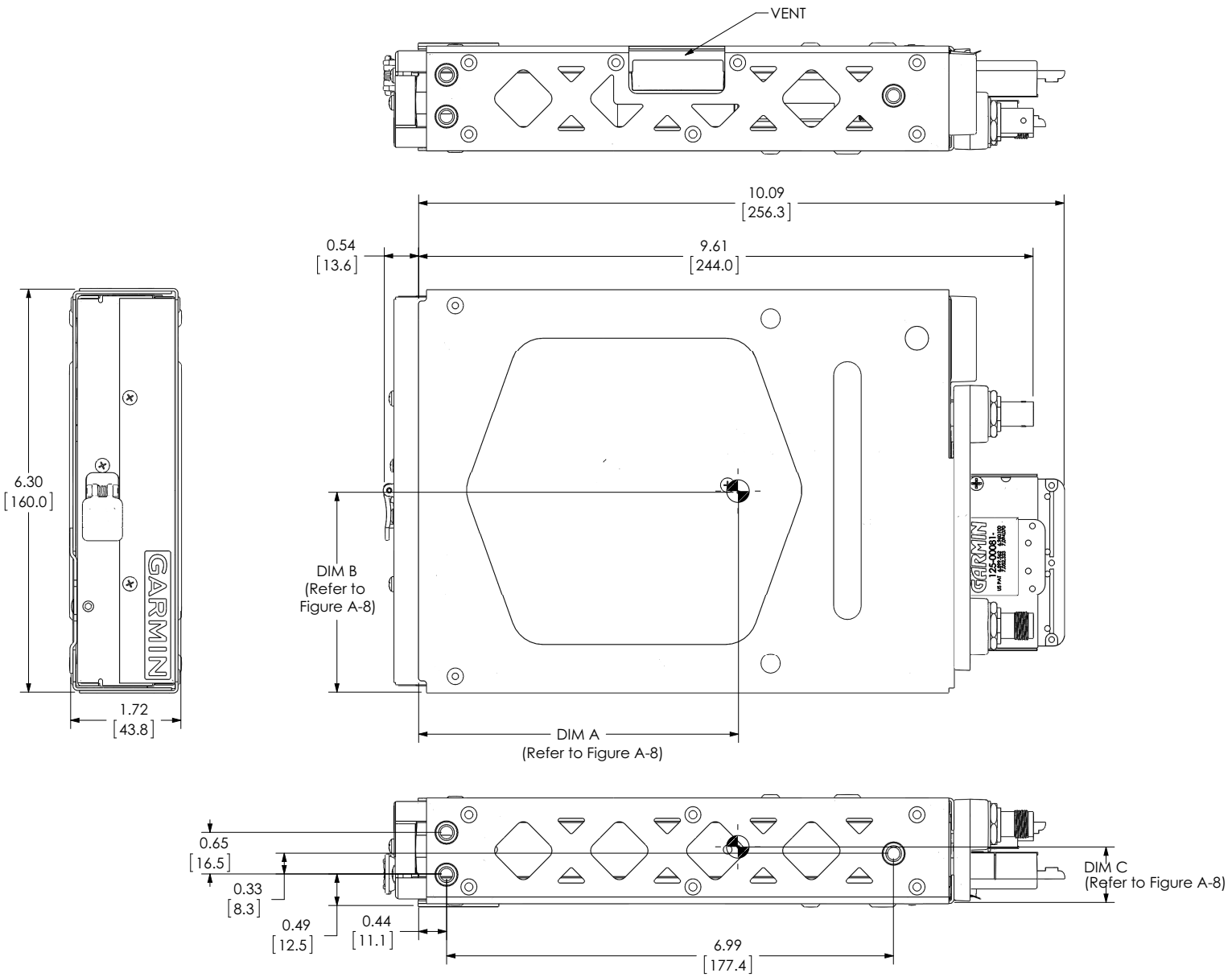

Figure A-7 Typical GTX 3X5 Horizontal Remote Mount Dimensions and Center of Gravity

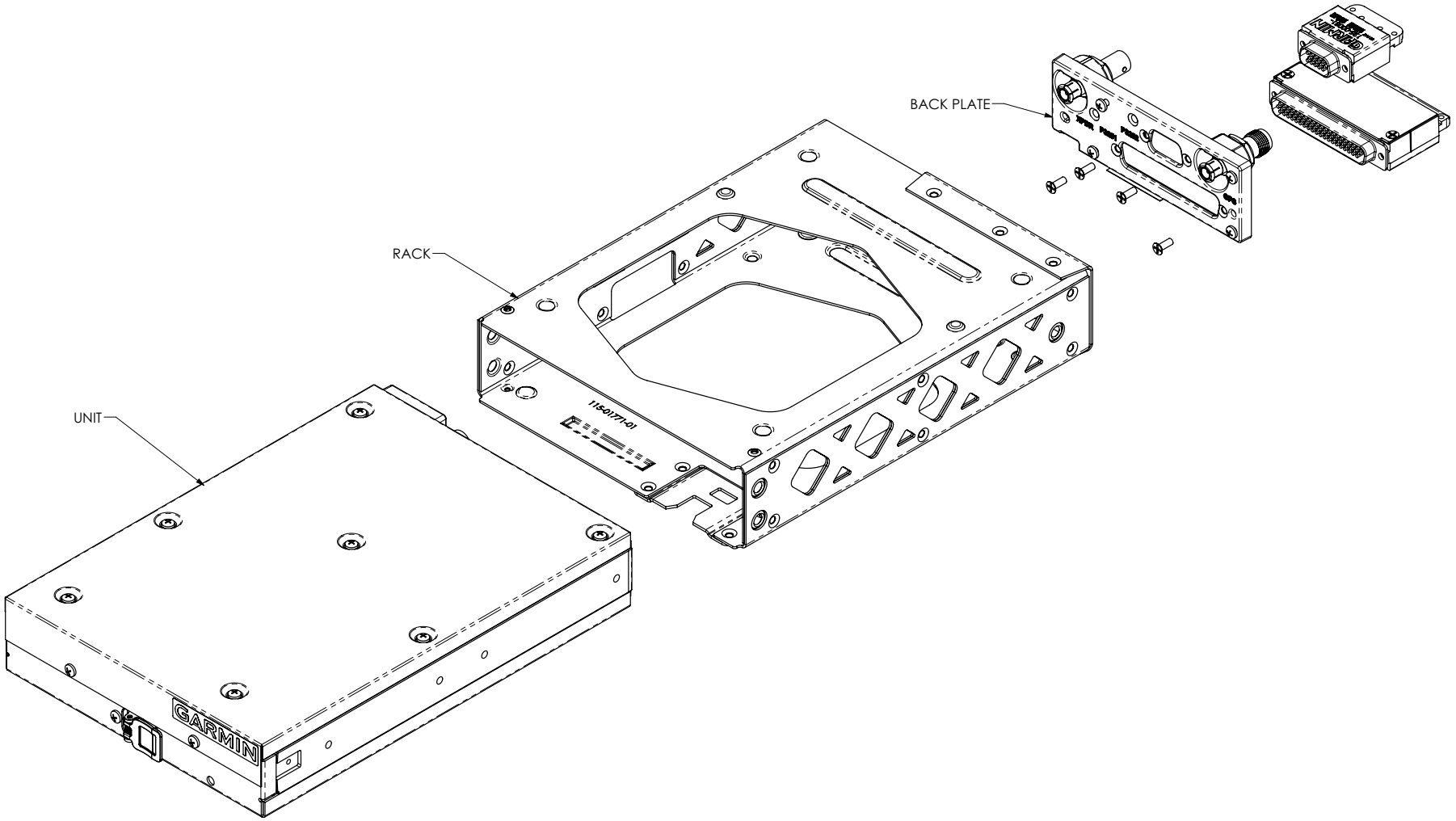

Figure A-8 GTX 3X5 Horizontal Remote Mount Rack Assembly

Table A-2 Part Numbers (Remote Horizontal Mount)

Standard Kit	Unit P/N	Unit Description	Conn Kit	Config Module	Rack [1]	Backplate Assembly	Mount Type	DIM A - in (mm)	DIM B - in (mm)	DIM C - in (mm)
010-01215-01	011-03301-00	Sub-Assy, GTX 335R	011-02977-00	011-00979-03	115-01771-01	011-02976-00	Remote	4.8 (120)	3.3 (84)	0.8 (20)
010-01215-06	011-03301-01		011-02977-00	011-00979-03	115-01771-01	011-02976-00	Remote	4.8 (120)	3.3 (84)	0.8 (20)
010-01215-41	011-03301-40	Sub-Assy, GTX 335R, GPS	011-02977-00	011-00979-03	115-01771-01	011-02976-01	Remote	4.9 (124)	3.2 (81)	0.8 (20)
010-01774-01	011-04332-00	Sub-Assy, GTX 335DR	011-02977-00	011-00979-03	115-01771-01	011-04340-00	Remote	4.9 (125)	3.3 (84)	0.8 (20)
010-01217-00	011-03303-00	Sub-Assy, GTX 345R	011-02977-01	011-00979-03	115-01771-01	011-02976-00	Remote	5.0 (127)	3.0 (76)	0.8 (20)
010-01217-06	011-03303-01		011-02977-01	011-00979-03	115-01771-01	011-02976-00	Remote	5.0 (127)	3.0 (76)	0.8 (20
010-01217-0B	011-03303-02		011-02977-01	011-00979-03	115-01771-01	011-02976-00	Remote	5.0 (127)	3.0 (76)	0.8 (20
010-01217-41	011-03303-40	Sub-Assy, GTX 345R, GPS	011-02977-01	011-00979-03	115-01771-01	011-02976-01	Remote	5.0 (127)	3.1 (79)	0.8 (20)
010-01217-46	011-03303-41		011-02977-01	011-00979-03	115-01771-01	011-02976-01	Remote	5.0 (127)	3.1 (79)	0.8 (20)
010-01776-01	011-04334-00	Sub-Assy, GTX 345DR	011-02977-01	011-00979-03	115-01771-01	011-04340-02	Remote	4.9 (125)	3.2 (81)	0.8 (21)

Notes:

[1] The standard rack (P/N 115-01771-01) is the functional equivalent of P/N 115-01771-00.

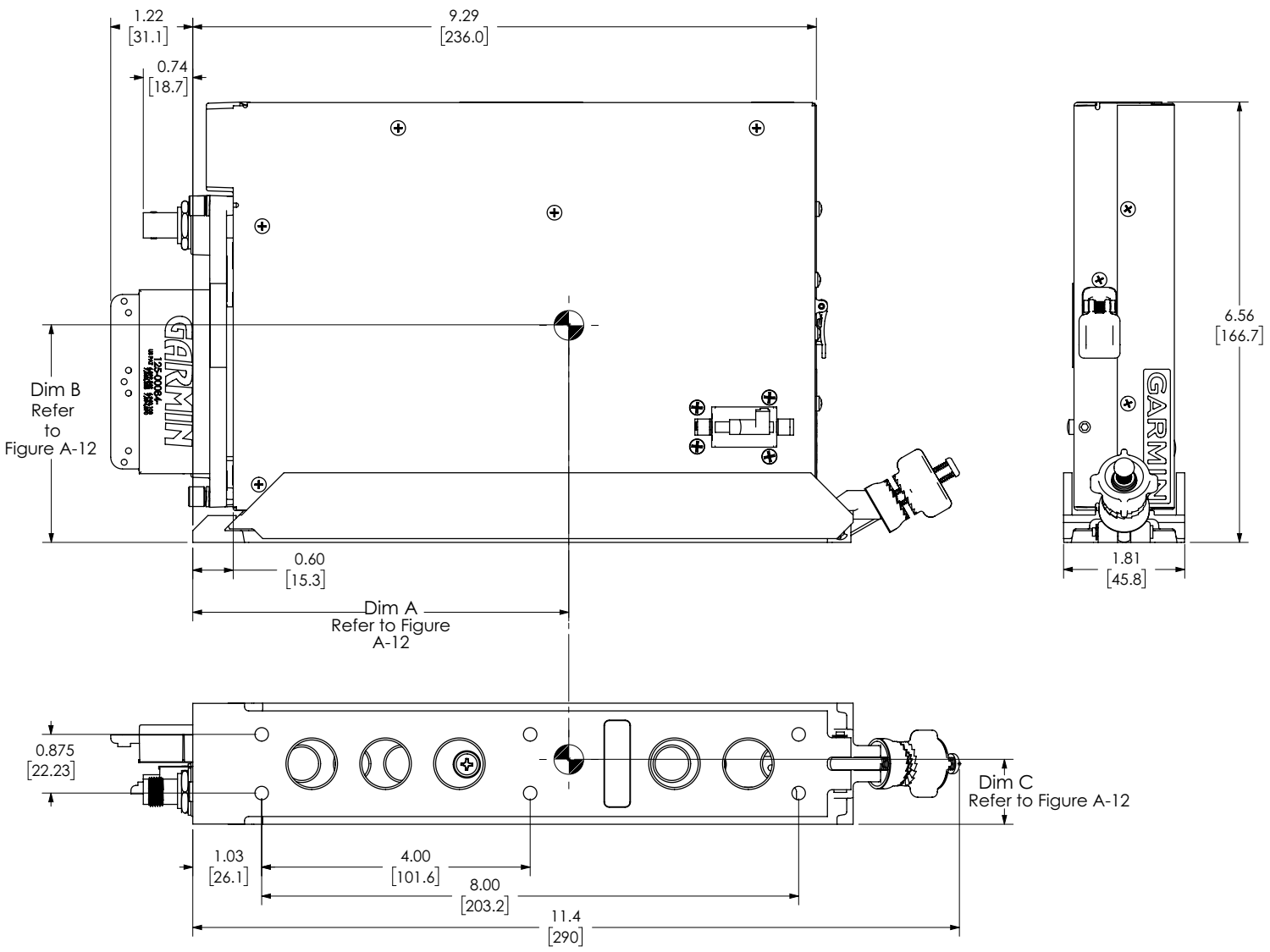

Figure A-9 Typical GTX 3X5 Vertical Mount Dimensions and Center of Gravity

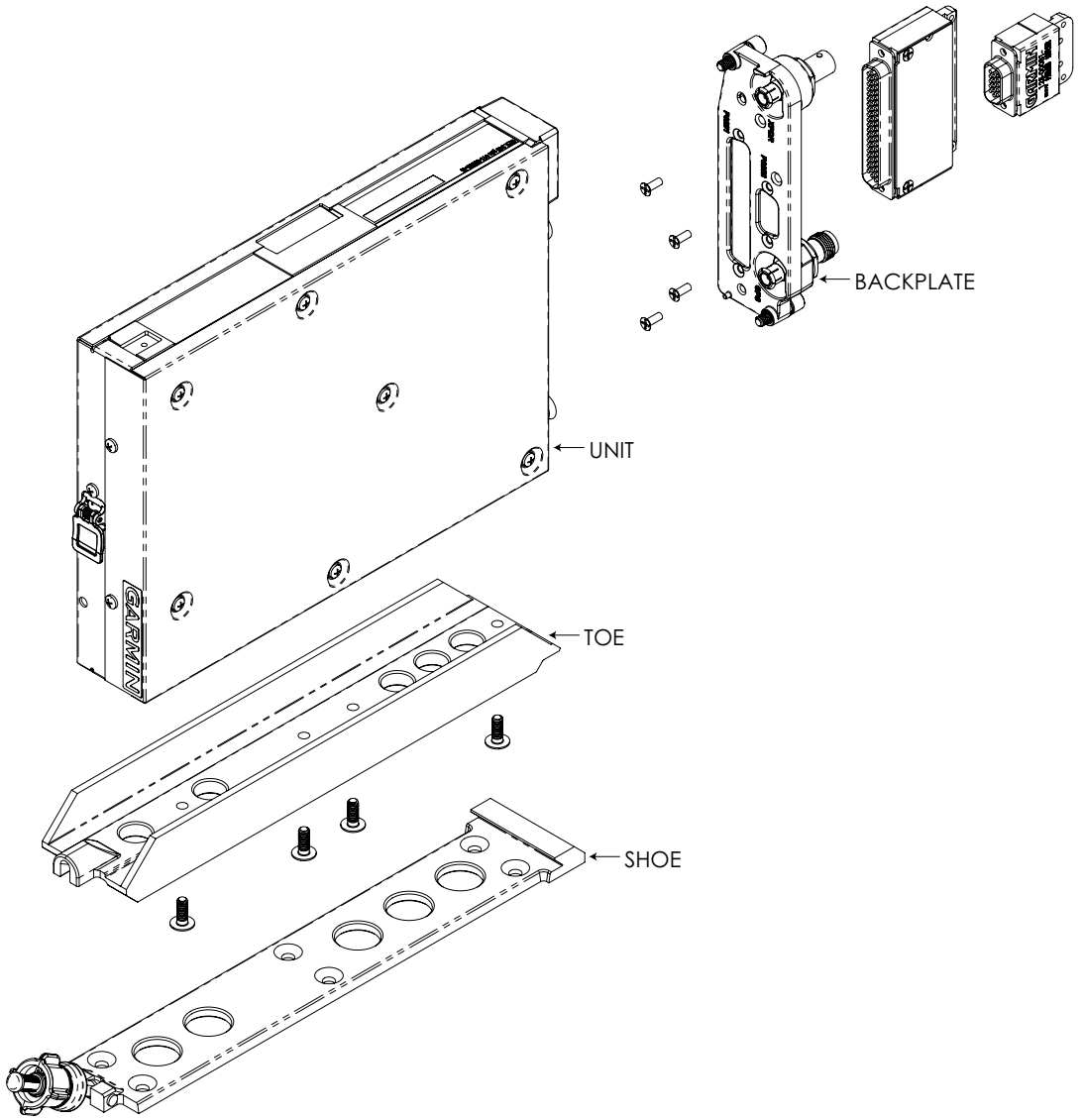

Figure A-10 GTX 3X5 Vertical Mount Assembly

Table A-3 Part Numbers (Remote Vertical Mount)

Standard Kit	Unit P/N	Unit Description	Conn Kit	Config Module	Rack [1]	Backplate Assembly	Mount Type	DIM A - in (mm)	DIM B - in (mm)	DIM C - in (mm)
010-01215-02	011-03301-00	Sub-Assy, GTX 335R	011-02977-00	011-00979-03	011-03762-00	011-02976-10	Remote	5.5 (140)	2.7 (69)	1.0 (25)
010-01215-42	011-03301-40	Sub-Assy, GTX 335R, GPS	011-02977-00	011-00979-03	011-03762-00	011-02976-11	Remote	5.5 (140)	2.8 (71)	0.9 (23)
010-01774-02	011-04332-00	Sub-Assy, GTX 335DR	011-02977-00	011-00979-03	011-03762-00	011-04340-10	Remote	4.4 (113)	2.9 (74)	0.8 (21)
010-01217-02	011-03303-00	Sub-Assy, GTX 345R	011-02977-01	011-00979-03	011-03762-00	011-02976-10	Remote	5.6 (142)	2.7 (69)	0.9 (23)
010-01217-07	011-03303-01		011-02977-01	011-00979-03	011-03762-00	011-02976-10	Remote	5.6 (142)	2.7 (69)	0.9 (23)
010-01217-42	011-03303-40	Sub-Assy, GTX 345R, GPS	011-02977-01	011-00979-03	011-03762-00	011-02976-11	Remote	5.6 (142)	2.7 (69)	0.9 (23)
010-01217-47	011-03303-41		011-02977-01	011-00979-03	011-03762-00	011-02976-11	Remote	5.6 (142)	2.7 (69)	0.9 (23)
010-01776-02	011-04334-00	Sub-Assy, GTX 345DR	011-02977-01	011-00979-03	011-03762-00	011-04340-10	Remote	4.3 (108)	2.9 (73)	0.9 (22)

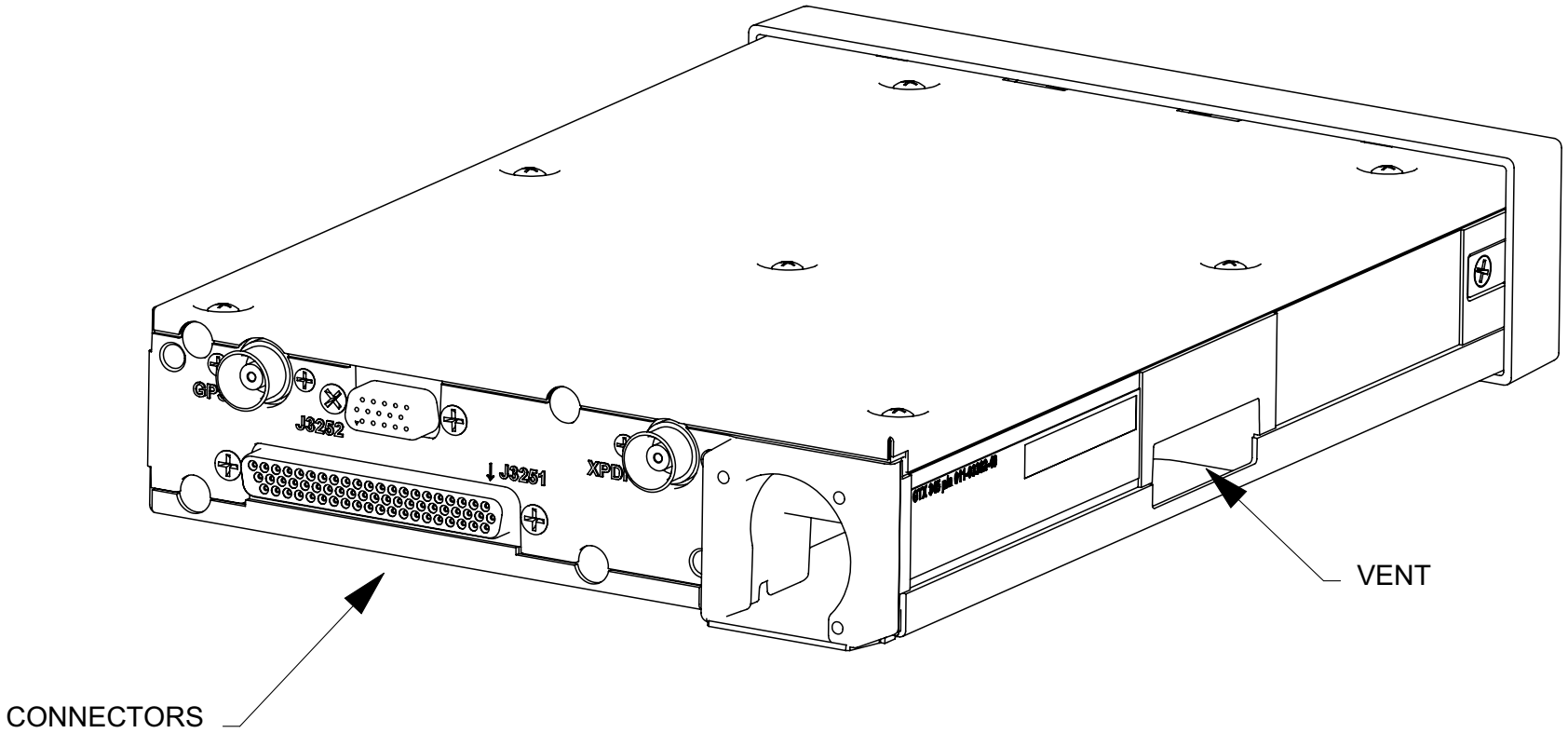

Figure A-11 GTX 3X5 Connector and Vent Location

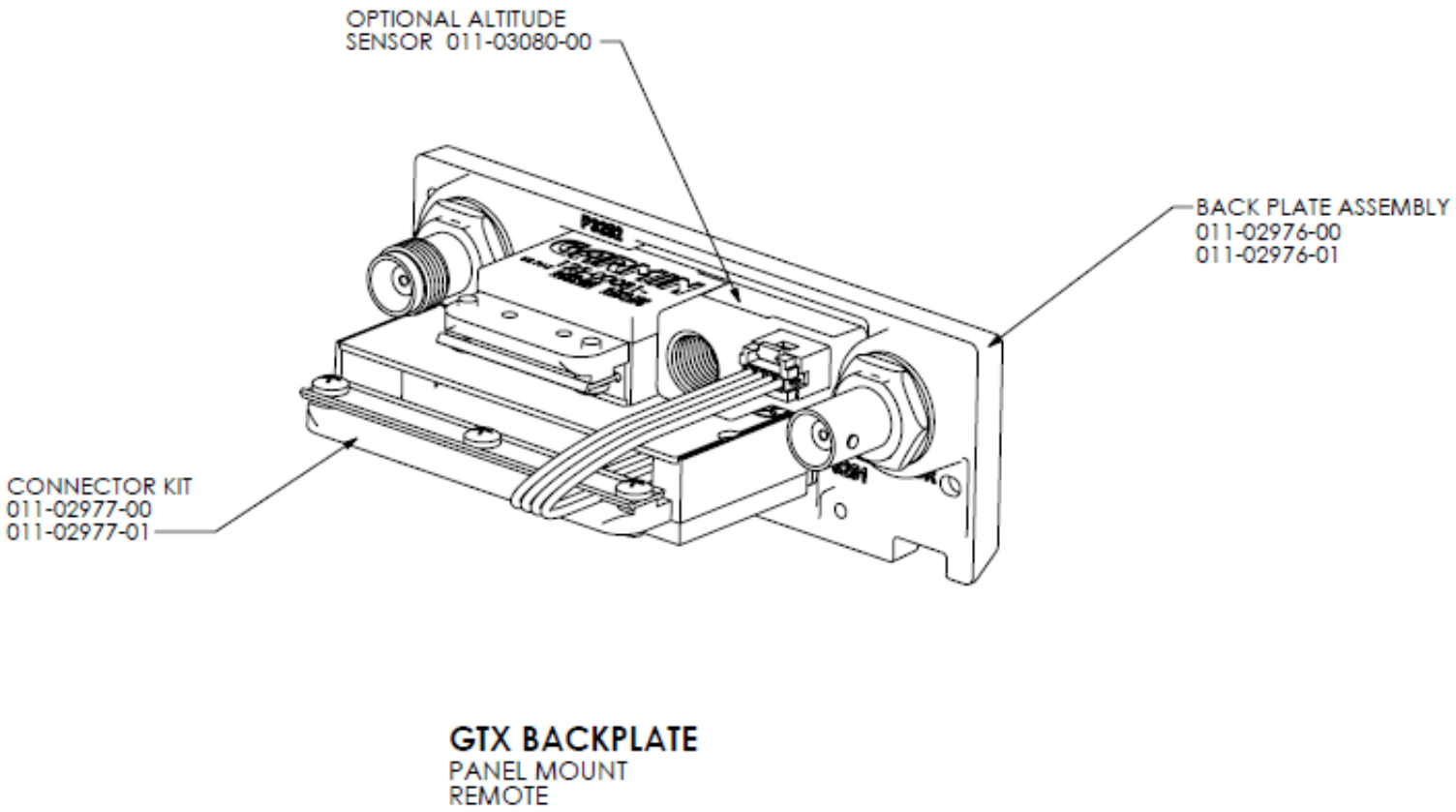

Figure A-12 Optional Altitude Sensor

GTX 3X5 WITH G1000

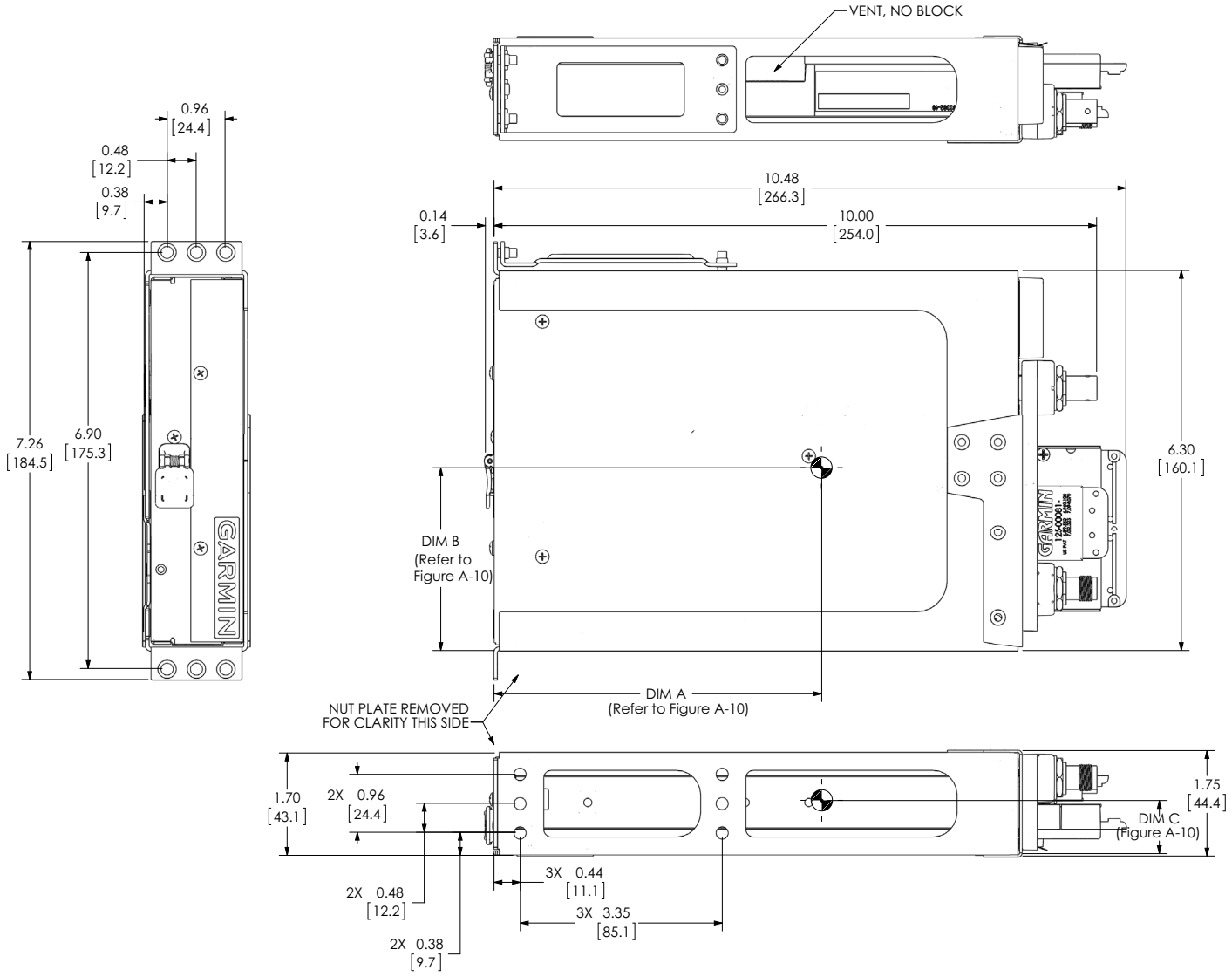

Figure A-13 Typical GTX 3X5 G1000 Remote Mount Dimensions and Center of Gravity

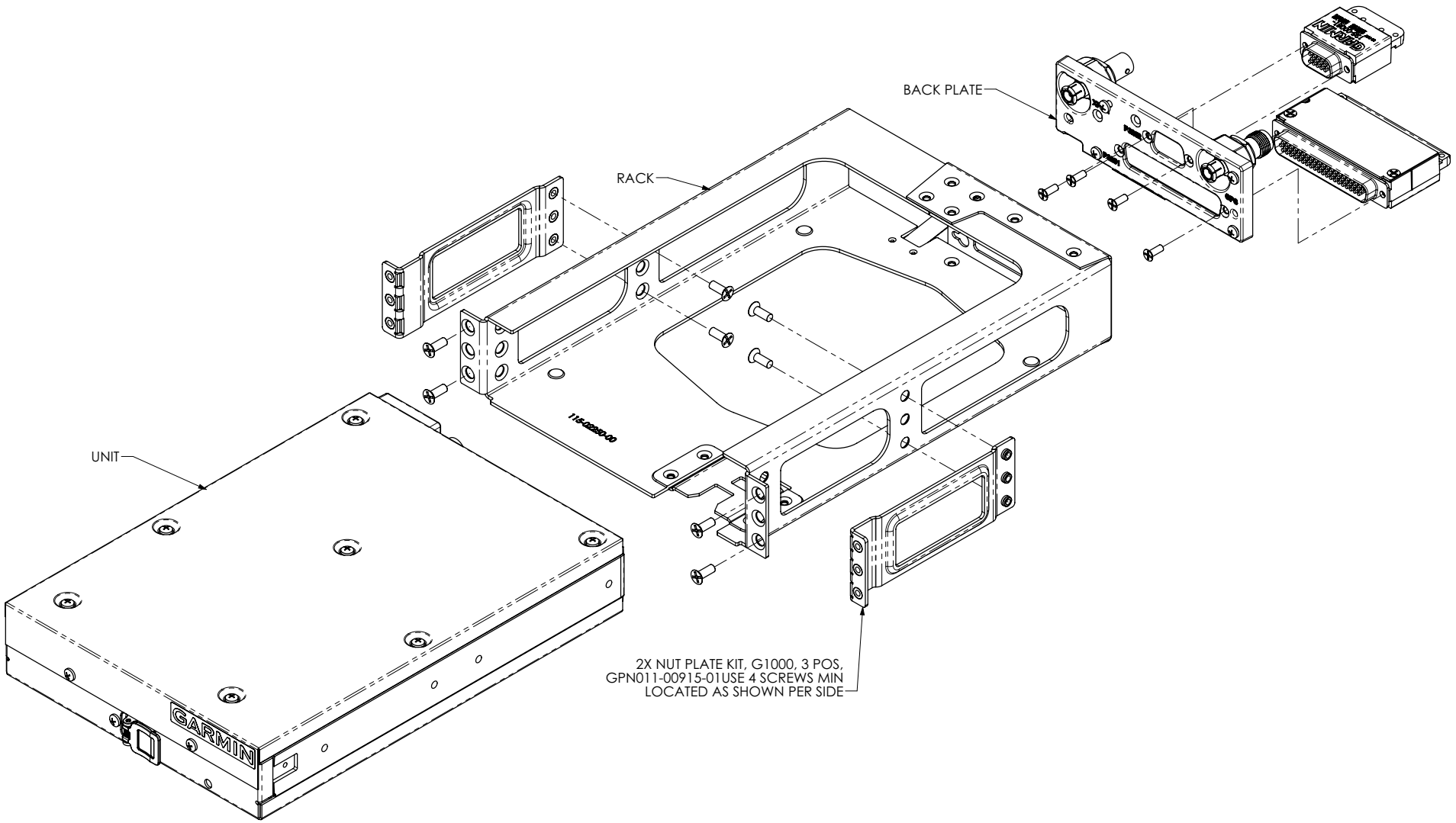

Figure A-14 GTX 3X5 G1000 Remote Mount Assembly

Table A-4 Part Numbers (Remote G1000 Mount)

Standard Kit	Unit P/N	Unit Description	Conn Kit	Config Module	Rack [1]	Backplate Assembly	Mount Type	DIM A - in (mm)	DIM B - in (mm)	DIM C - in (mm)
010-01215-03	011-03301-00	Sub-Assy, GTX 335R	011-02977-00	011-00979-03	115-02250-00	011-02976-00	G1000	5.3 (135)	3.2 (81)	0.7 (18)
010-01215-43	011-03301-40	Sub-Assy, GTX 335R, GPS	011-02977-00	011-00979-03	115-02250-00	011-02976-01	G1000	5.3 (135)	3.2 (81)	0.8 (20)
010-01774-03	011-04332-00	Sub-Assy, GTX 335DR	011-02977-00	011-00979-03	115-02250-00	011-04340-00	G1000	5.0 (127)	3.3 (8.4)	0.8 (20)
010-01217-03	011-03303-00	Sub-Assy, GTX 345R	011-02977-01	011-00979-03	115-02250-00	011-02976-00	G1000	5.4 (137)	3.0 (76)	0.8 (20)
010-01217-08	011-03303-01		011-02977-01	011-00979-03	115-02250-00	011-02976-00	G1000	5.4 (137)	3.0 (76)	0.8 (20)
010-01217-43	011-03303-40	Sub-Assy, GTX 345R, GPS	011-02977-01	011-00979-03	115-02250-00	011-02976-01	G1000	5.4 (137)	3.1 (79)	0.8 (20)
010-01217-48	011-03303-41		011-02977-01	011-00979-03	115-02250-00	011-02976-01	G1000	5.4 (137)	3.1 (79)	0.8 (20)
010-01776-03	011-04334-00	Sub-Assy, GTX 345DR	011-02977-01	011-00979-03	115-02250-00	011-04340-02	G1000	5.2 (133)	3.1 (80)	0.8 (21)

APPENDIX B INTERCONNECT DRAWINGS

GTX 33/330

Figure B-1 GTX 33/330 - Power and Ground B-4
Figure B-2 GTX 33/330 - GTN 6XX/7XX B-6
Figure B-3 GTX 330/330D - GPS 175/GNC 355 ..... B-8
Figure B-4 GTX 33/330 - GNS 400W/500W Series B-9
Figure B-5 GTX 33/330 - GNS 480 (CNX80) B-11
Figure B-6 GTX 33/330 - MFD Typical B-13
Figure B-7 GTX 33/330 - AHRS/Heading Data Source B-14
Figure B-8 GTX 33/330 - Altitude Data Source B-15
Figure B-9 GTX 33/330 - Audio Panel B-17
Figure B-10 GTX 33/330 - GDL 88 with GPS B-18
Figure B-11 GTX 33/330 - Radio Altimeter Source B-19

GTX 3X5

Figure B-12 GTX 3X5 - Power, Ground, and Configuration Module B-20
Figure B-13 GTX 335 - GTN 6XX/7XX B-22
Figure B-14 GTX 335 - Single GTN 6XX/7XX (Single/Dual GTX) B-23
Figure B-15 GTX 3X5 - Single GTN 6XX/7XX / (Dual GTX) B-24
Figure B-16 GTX 3X5 - Dual GTN / (Dual GTX) B-25
Figure B-17 GTX 345 - GTN 6XX/7XX B-26
Figure B-18 GTX 345 - Single/Dual GTN 6XX/7XX B-28
Figure B-19 GTX 3X5 - GPS 175/GNC 355 ..... B-30
Figure B-20 GTX 3X5 - GNS 400W/500W Series B-31
Figure B-21 GTX 345 and 335 - Single GNS 400W/500W Series B-33
Figure B-22 GTX 345 and 335 - Dual GNS 400W/500W Series B-34
Figure B-23 GTX 3X5 - GNS 480 (CNX80) B-35
Figure B-24 GTX 3X5 - Providing GPS to GTX 3XX B-36
Figure B-25 GTX 3X5 - Altitude Data Source B-37
Figure B-26 GTX 3X5 - AHRS Heading Data Source B-39
Figure B-27 GTX 3X5 - Gables 7534 Transponder Controller B-40
Figure B-28 GTX 3X5 - Gables 7614 Transponder Controller (Collins) B-42
Figure B-29 GTX 3X5 - Gables 7614 Transponder Controller (Honeywell Config 1) B-44
Figure B-30 GTX 3X5 - Gables 7614 Transponder Controller (Honeywell Config 2) B-46
Figure B-31 GTX 3X5 - Collins CTL-92E Transponder Controller (ARINC 429) B-48
Figure B-32 GTX 3X5 - Collins CTL-92E Transponder Controller (RS-232) B-50
Figure B-33 GTX 3X5 - Collins CTL-92 Transponder Controller (RS-232) B-52
Figure B-34 GTX 3X5 - Traffic Annunciator Lamp B-54
Figure B-35 ADS-B Out Failure Annunciator Lamp B-55
Figure B-36 GTX 3X5 - Audio B-56
Figure B-37 GTX 3X5 - Switches B-57
Figure B-38 GTX 335 - GTS 8XX Interface B-58
Figure B-39 GTX 345 - Traffic System B-59
Figure B-40 GTX 345 - Flight Stream B-62
Figure B-41 GTX 3X5 - Radio Altimeter B-63
Figure B-42 GTX 335 - GMX 200 ..... B-64
Figure B-43 GTX 345 - MX20/GMX 200 ..... B-65

Figure B-44 GTX 335 - TIS-A Display B-66
Figure B-45 GTX 345 - GDU B-67
Figure B-46 GTX 345D - Time Mark B-68
Figure B-47 GTX 3X5 - GI 275 ..... B-69

G950/G1000

Figure B-48 GTX 335 - G950/G1000 (Typical) B-71
Figure B-49 GTX 345 - G950/G1000 (Typical) B-72
Figure B-50 GTX 3X5 - G950/G1000 (Dual GTX) B-74
Figure B-51 GTX 345 - G1000 with TAS 6XX B-76
Figure B-52 GTX 345 - G1000 with External Traffic B-78

This section contains wiring interconnect information and examples for the connections necessary for the installation of the GTX 33/330 and GTX 3X5 series transponders.

GENERAL NOTES

Each figure contained in this section has notes that must be followed. These general notes apply to all of the figures in this section:

- Unless specified differently, all wires are 24 AWG or larger
- Antennas and associated cabling are shown for reference only
- In dual GTX transponder installations, each transponder must be grounded separately using separate ground terminal/stud locations on the aircraft
- If practical, power and ground wiring should be routed separately for each transponder
- Route grounds and wire separately to improve safety if there is a wiring or grounding system failure
- Designations for ground connections are as follows:

  Shield Block Ground

  Airframe Ground
- Shield ground terminations to the connector backshell must be 3.0 inches or less in length
- Ground terminations of interfaced equipment can vary. Refer to the manufacturer's installation manual for information
- HSDB Ethernet wiring must use 24 AWG aircraft grade category 5 Ethernet cable. Refer to Table 4-5 for approved Ethernet cable part numbers
- HSDB, RS-232, and ARINC 429 ports shown are suggested port configurations, unless specifically noted. GTX RS-232 Port 4 is not interchangeable with other RS-232 ports.

Installations can require alternate port configurations and are permitted provided the equipment interfaces and data formats are available on alternate ports

GTX 33/330

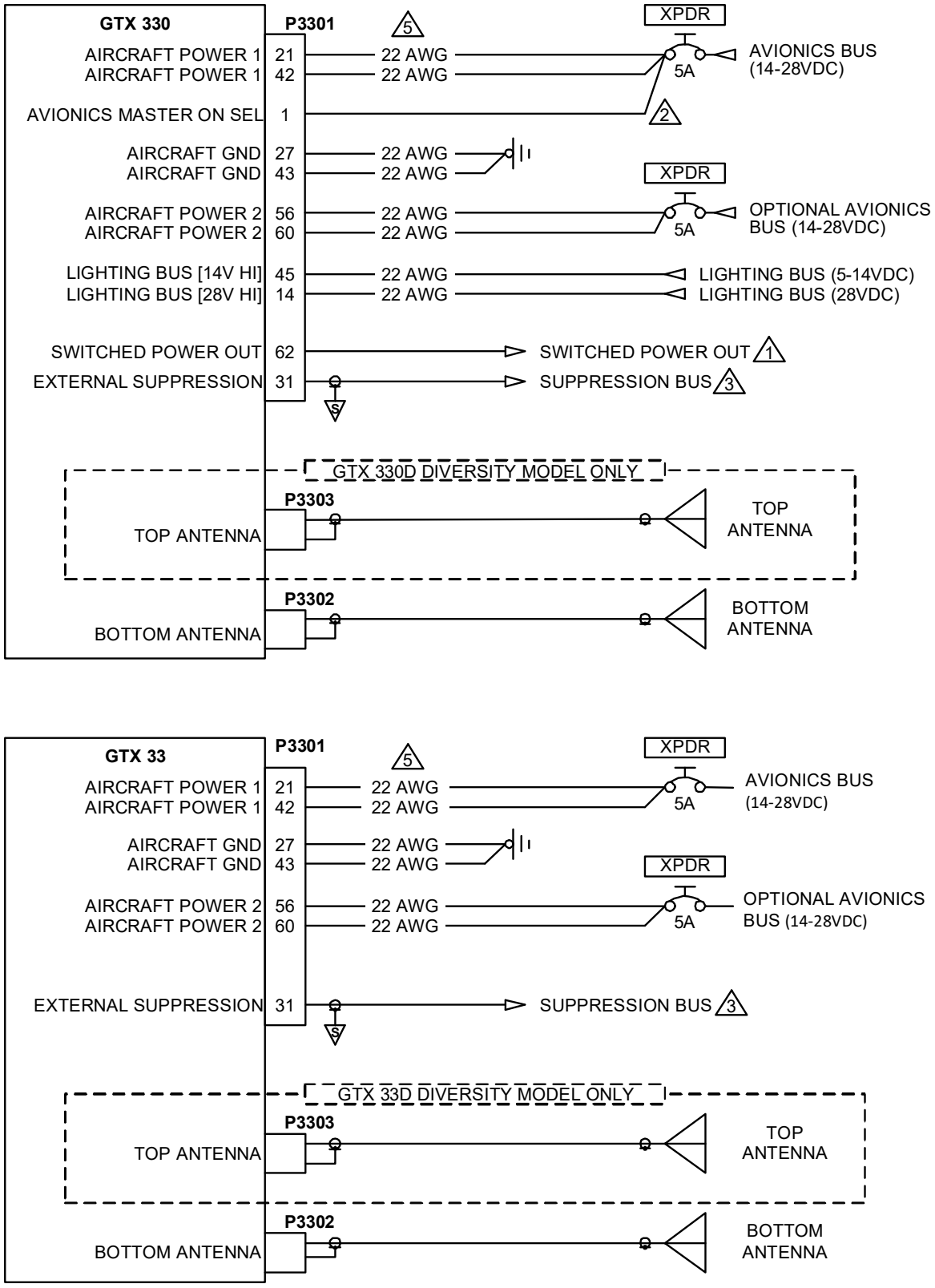

Figure B-1 GTX 33/330 - Power and Ground
Sheet 1 of 2

NOTES

1. ABSOLUTE MAXIMUM SOURCE CURRENT FROM THE SWITCHED POWER OUTPUT IS 1.5 AMPS @ SUPPLY VOLTAGE (14/28 VDC).

2. AVIONICS MASTER ON SELECT AUTOMATICALLY POWERS ON THE UNIT TO THE LAST MODE SELECTED.

3. EXTERNAL SUPPRESSION SENDS AND ACCEPTS POSITIVE GOING SUPPRESSION PULSES TO/FROM ANOTHER TRANSPONDER/DME. I/O PULSES MAY NOT BE COMPATIBLE WITH ALL MODELS OF DME. THE BENDIX/KING KN 62, KN 64, AND KNS 80 HAVE AN OUTPUT-ONLY SUPPRESSION AND MAY DAMAGE THE GTX MUTUAL SUPPRESSION OUTPUT. DO NOT CONNECT THE GTX MUTUAL SUPPRESSION PIN.

4. REFER TO THE GENERAL NOTES IDENTIFIED AT THE START OF THIS APPENDIX FOR MORE INFORMATION AND REQUIREMENTS.

5. FOR 14 VDC INSTALLATIONS, THE USE OF TWO AIRCRAFT POWER AND TWO AIRCRAFT GROUND CONTACTS IN THE CONNECTOR IS RECOMMENDED FOR EACH POWER BUS CONNECTION. 28 VDC INSTALLATIONS ONLY REQUIRE ONE AIRCRAFT POWER AND ONE AIRCRAFT GROUND CONTACT IN THE CONNECTOR FOR EACH POWER BUS CONNECTION. WHERE THE LENGTH IS IN EXCESS OF 10.0 FEET, 18 AWG WIRE SHOULD BE USED. OVERSIZE CONTACTS IN THE CONNECTOR KIT ARE FOR USE WITH WIRE SIZES GREATER THAN 22 AWG WHEN REQUIRED.

Figure B-1 GTX 33/330 - Power and Ground
Sheet 2 of 2

SINGLE GTN 6XX/7XX SERIES

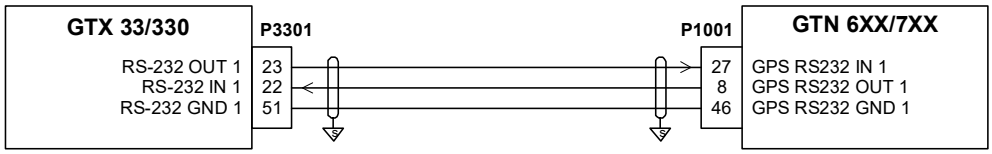

DUAL GTN 6XX/7XX SERIES

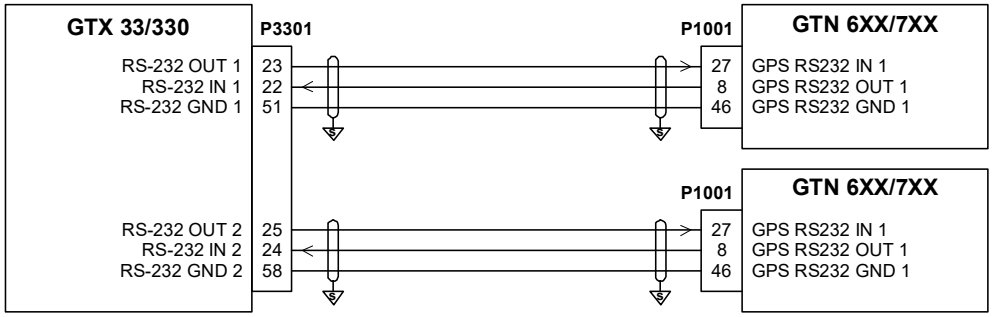

DUAL GTX 33/330 WITH SINGLE GTN 6XX/7XX SERIES

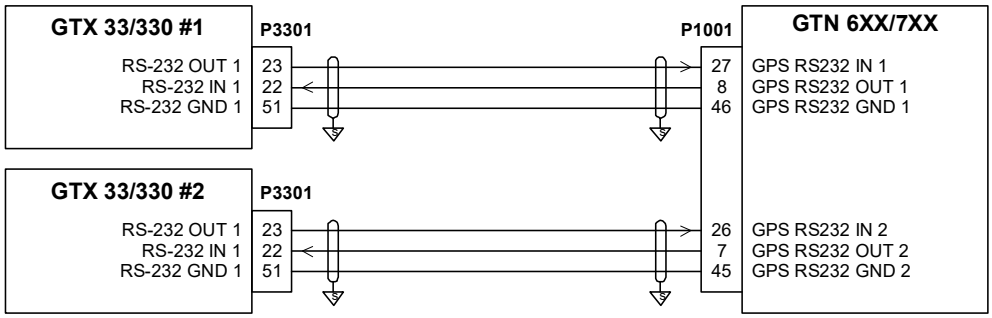

DUAL GTX 33/330 WITH DUAL GTN 6XX/7XX SERIES

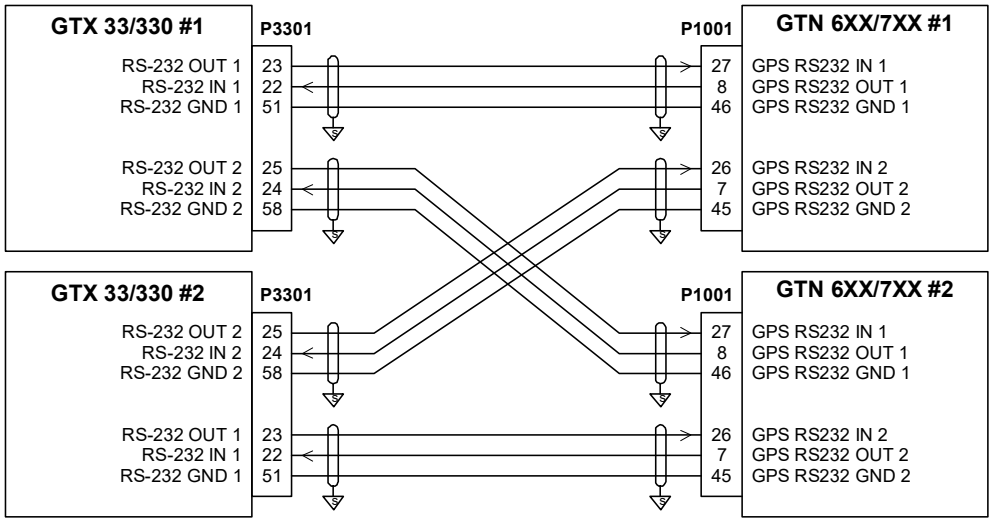

Figure B-2 GTX 33/330 - GTN 6XX/7XX
Sheet 1 of 2

NOTES

1 REFER TO THE GENERAL NOTES IDENTIFIED AT THE START OF THIS APPENDIX FOR MORE INFORMATION AND REQUIREMENTS.

Figure B-2 GTX 33/330 - GTN 6XX/7XX
Sheet 2 of 2

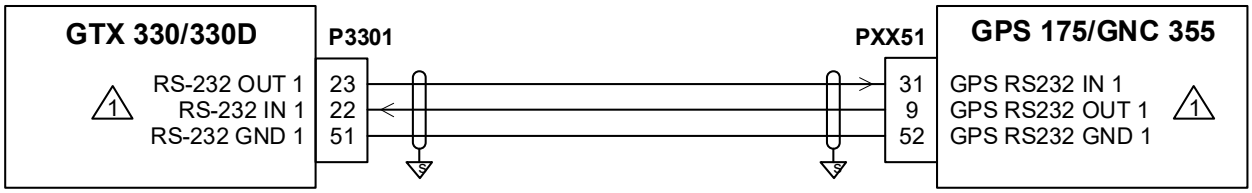

NOTES

1 ANY AVAILABLE RS-232 PORT MAY BE USED.

2 REFER TO THE GENERAL NOTES IDENTIFIED AT THE START OF THIS APPENDIX FOR MORE INFORMATION AND REQUIREMENTS.

Figure B-3 GTX 330/330D - GPS 175/GNC 355

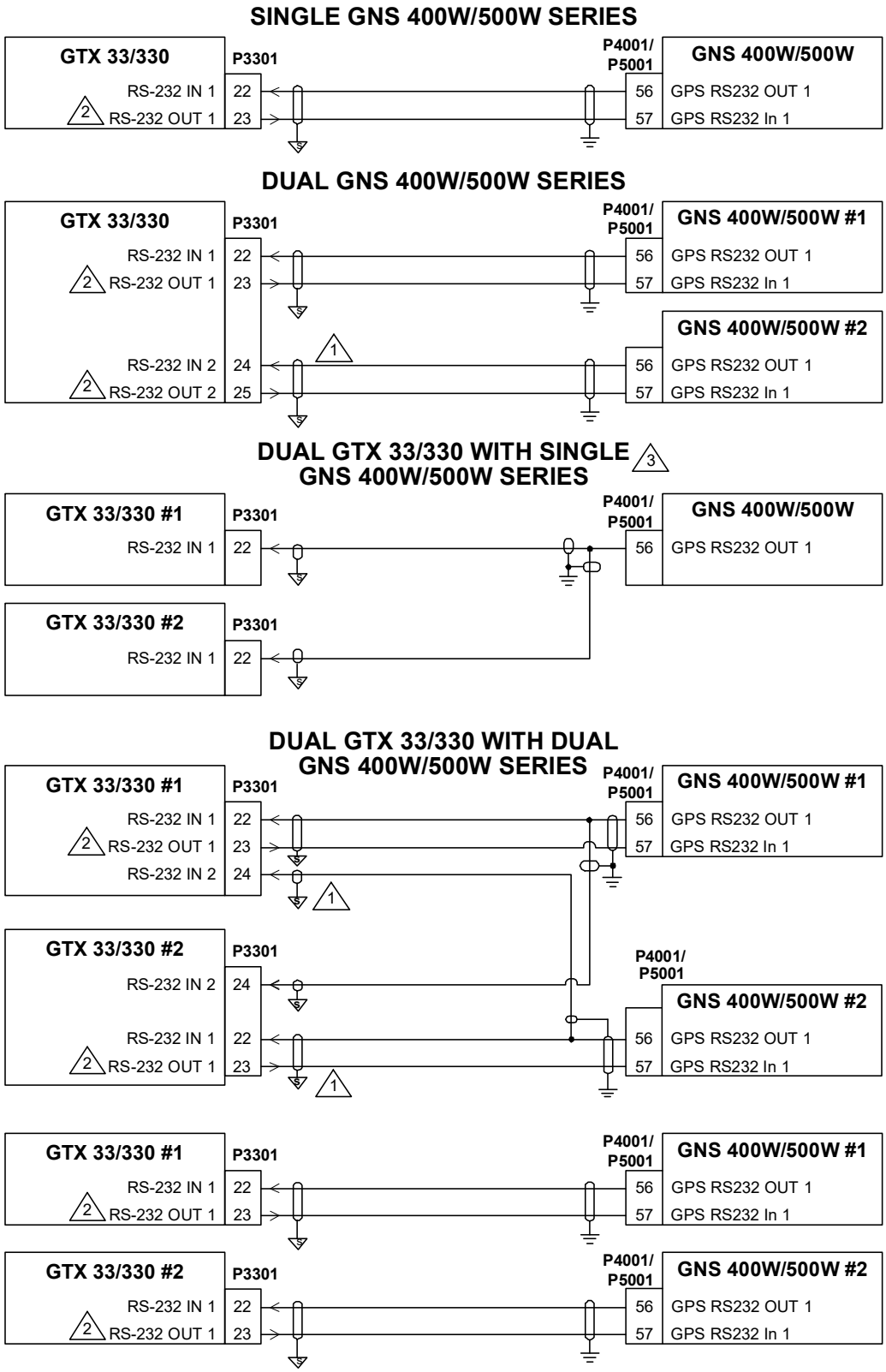

Figure B-4 GTX 33/330 - GNS 400W/500W Series
Sheet 1 of 2

DUAL GTX 330 WITH SINGLE GNS 400W/500W SERIES

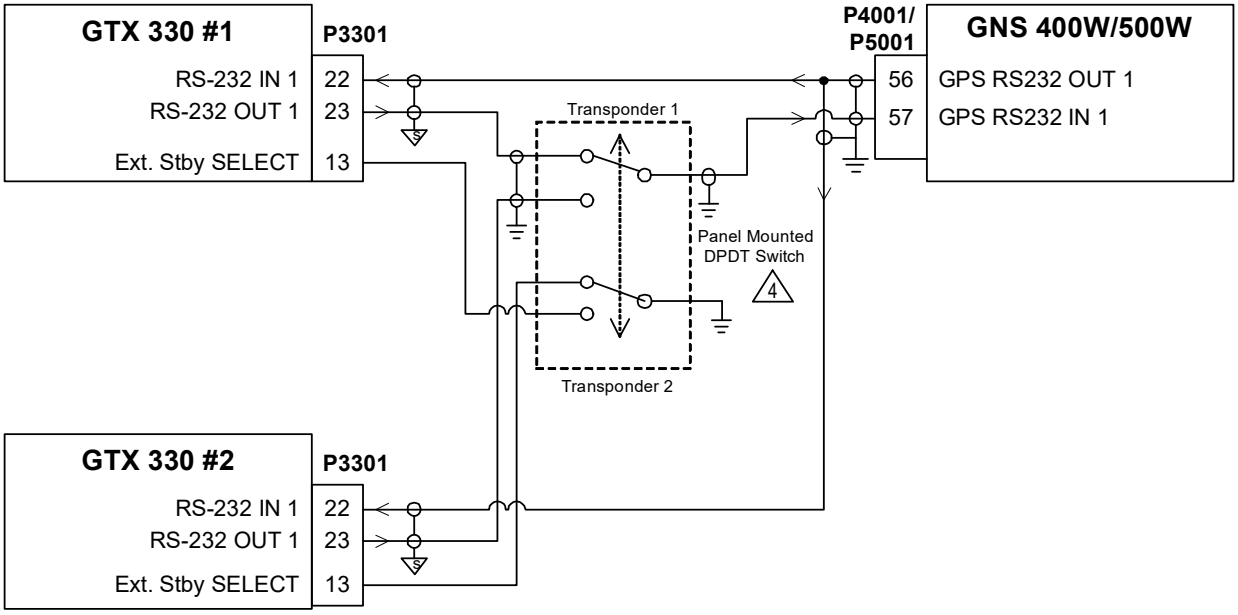

NOTES

1. IF REDUNDANT GPS DATA IS WIRED AS SHOWN IN THIS CONFIGURATION, AN ALTERNATE AIR DATA SOURCE MUST BE USED.

2. RS-232 OUT FROM THE GTX IS ONLY REQUIRED FOR A GTX 330 USING THE “GNS” COMMUNICATION FORMAT, PER TABLE C-3. A DPDT SWITCH IS REQUIRED FOR DUAL TRANSPONDERS INTERFACED TO A SINGLE GNS USING THE “GNS” FORMAT. IF TWO WAY RS-232 OR A DPDT SWITCH IS NOT DESIRED, THE “REMOTE” FORMAT MUST BE USED, AS DESCRIBED IN TABLE C-3.

3. THE GTX 330 MUST USE THE “REMOTE” FORMAT AND THE GNS 4XXW/5XXW MUST USE THE “ADS-B+ FORMAT” WITH THIS WIRING CONFIGURATION. HAT WILL NOT BE PROVIDED WITH THIS CONFIGURATION. IF HAT IS DESIRED, THE INTERCONNECT ON SHEET 2 OF THIS FIGURE MUST BE USED ALONG WITH THE APPROPRIATE CONFIGURATION SETTINGS TO PROVIDE HAT AS DESCRIBED IN TABLE C-3.

4. A SWITCH MUST BE INSTALLED TO ALLOW ONLY ONE TRANSPONDER TO BE ACTIVE AT A TIME. A SUITABLE DPDT SWITCH IS A C&K 7000 SERIES (P/N 7201SYZQE) OR EQUIVALENT.

5. REFER TO THE GENERAL NOTES IDENTIFIED AT THE START OF THIS APPENDIX FOR MORE INFORMATION AND REQUIREMENTS.

Figure B-4 GTX 33/330 - GNS 400W/500W Series
Sheet 2 of 2

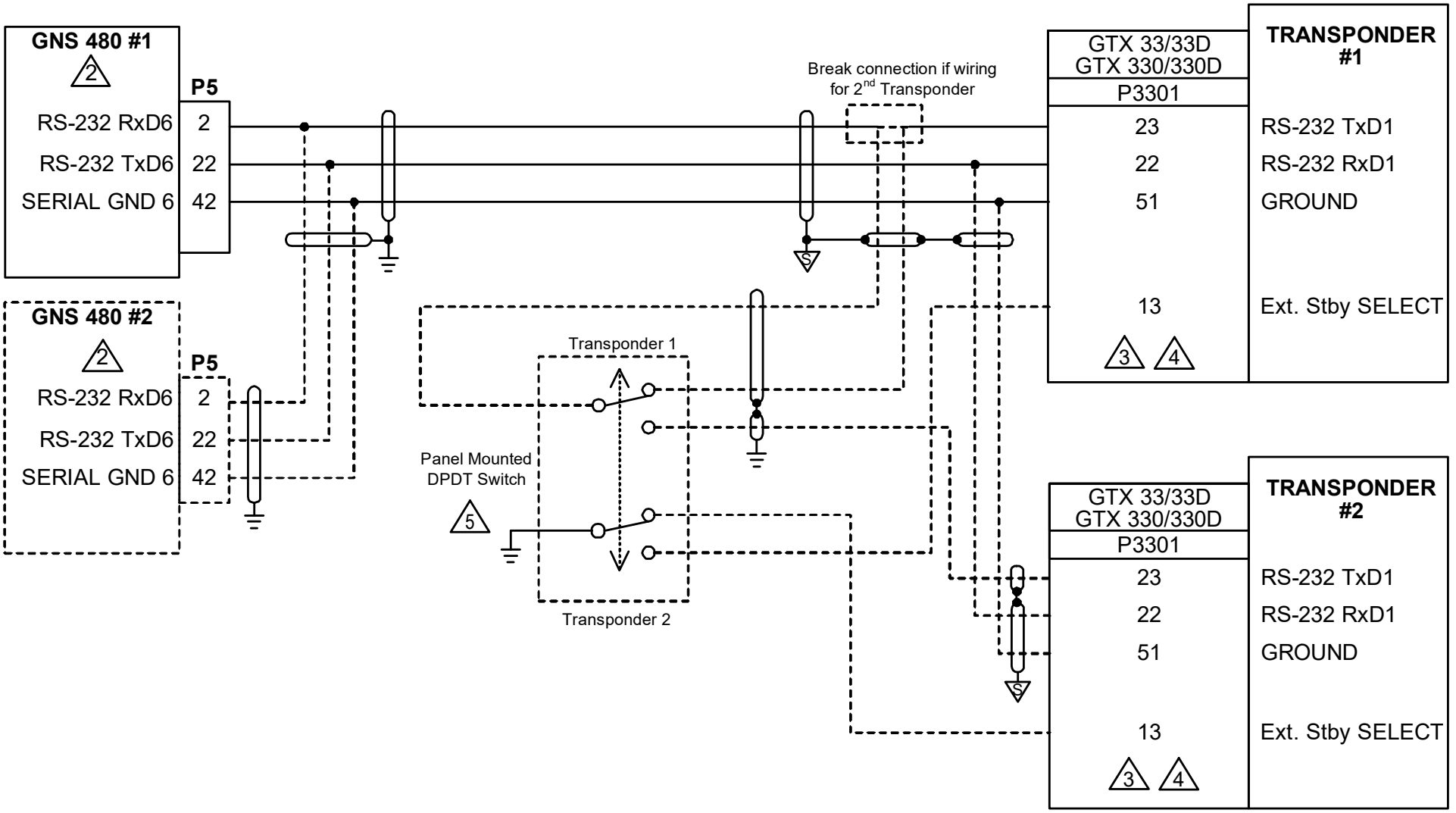

Figure B-5 GTX 33/330 - GNS 480 (CNX80)
Sheet 1 of 2

NOTES

1. REFER TO THE GENERAL NOTES IDENTIFIED AT THE START OF THIS APPENDIX FOR MORE INFORMATION AND REQUIREMENTS.

2. GNS 480 SW VERSION 2.40 OR LATER IS REQUIRED TO PROVIDE GPS/SBAS DATA FOR ADS-B OUT COMPLIANCE.

3. THE GNS 480 WILL REMOTELY CONTROL THE GTX 33/330 TRANSPONDER. IF THE GTX 33/330 TRANSPONDER (SOFTWARE VERSION 3.06 OR LATER) HAS GRAY CODE ALTITUDE PROVIDED TO IT, IT WILL PROVIDE ALTITUDE TO THE GNS 480. IF THE GTX 33/330 HAS SERIAL ALTITUDE PROVIDED TO IT, THE GTX 33/330 WILL **NOT** PROVIDE ALTITUDE TO THE GNS 480.

4. GNS 480 SERIAL PORT 6 (RX/TX) AND GTX MUST BE CONFIGURED AS SHOWN IN TABLE C-3.

5. A SWITCH MUST BE INSTALLED TO ALLOW ONLY ONE TRANSPONDER TO BE ACTIVE AT A TIME. REFER TO *GNS 480 (CNX80) COLOR GPS/NAV/COM INSTALLATION MANUAL* FOR APPROVED SWITCHES.

Figure B-5 GTX 33/330 - GNS 480 (CNX80)
Sheet 2 of 2

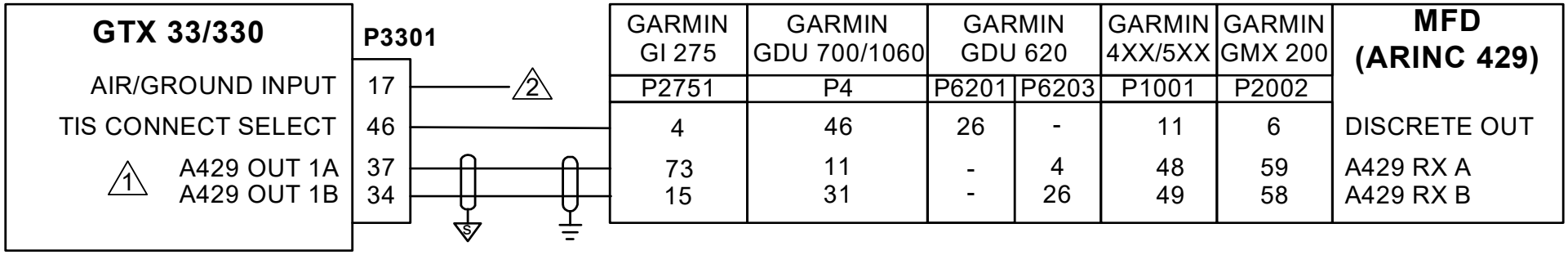

NOTES

1. WHEN TIS IS USED IN THE AIRCRAFT, DO NOT CONNECT ANOTHER TRAFFIC SYSTEM TO THE SAME UNIT.

2. AIR/GROUND INPUT IS CONNECTED TO THE AIRCRAFT GROUND POSITION, SQUAT, OR WEIGHT ON WHEELS SWITCH.

3. REFER TO THE GENERAL NOTES IDENTIFIED AT THE START OF THIS APPENDIX FOR MORE INFORMATION AND REQUIREMENTS.

Figure B-6 GTX 33/330 - MFD Typical

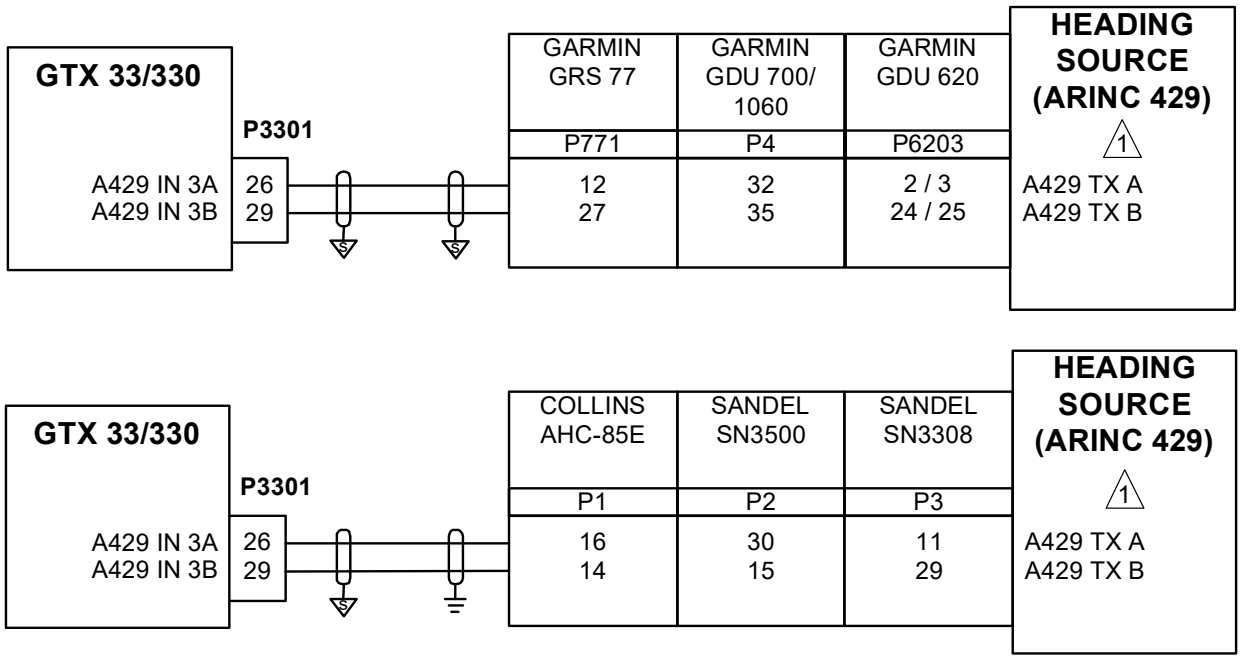

NOTES

1 REFER TO MANUFACTURER'S DOCUMENTATION FOR COMPLETE PINOUT AND INTERCONNECT INFORMATION.

2 REFER TO THE GENERAL NOTES IDENTIFIED AT THE START OF THIS APPENDIX FOR MORE INFORMATION AND REQUIREMENTS.

Figure B-7 GTX 33/330 - AHRS/Heading Data Source

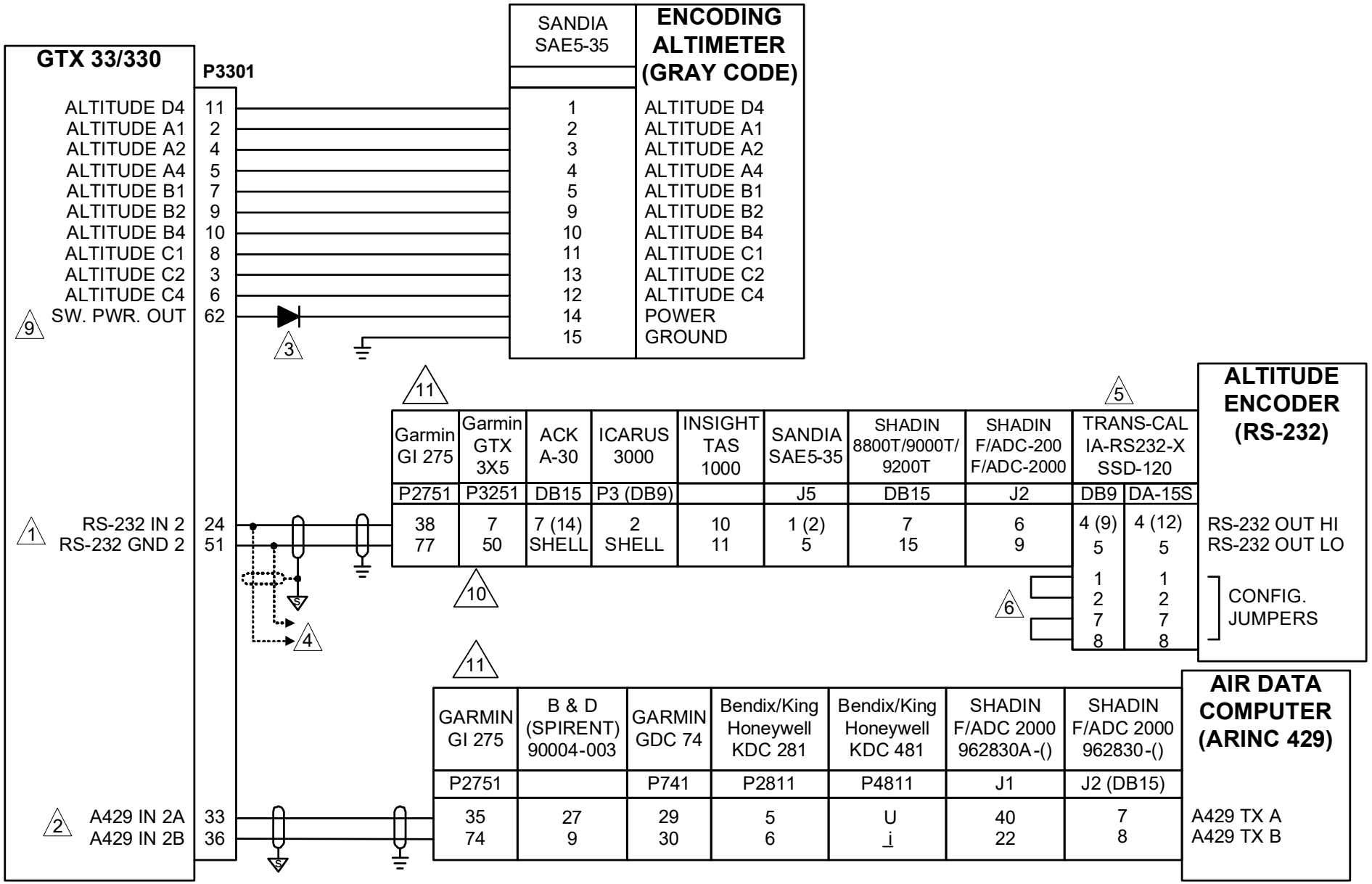

Figure B-8 GTX 33/330 - Altitude Data Source
Sheet 1 of 2

NOTES

1. IF RS-232 PORT 2 IS ALREADY USED FOR ANOTHER PURPOSE, RS-232 PORT 1 CAN BE USED.

2. IF ARINC 429 IN PORT 2 IS ALREADY USED FOR ANOTHER PURPOSE, ARINC 429 IN PORT 1 CAN BE USED.

3. USE 1N4007 DIODE FOR ENCODER POWER.

4. TO GTX #2 IF INSTALLED. RS-232 SPLICE MUST BE MADE ADJACENT TO GTX #1 CONNECTOR AS SHOWN.

5. IF USING THE SERIAL PORT SOFTWARE METHOD TO CONFIGURE THE OUTPUT OF THE ENCODER, MAKE SURE THE “TRIMBLE/GARMIN 9600 BPS” FORMAT IS SELECTED. REFER TO THE MANUFACTURER’S INSTALLATION MANUAL FOR OTHER AVAILABLE RS232 TX PORTS.

6. THE LENGTH OF THE STRAPS MUST BE LIMITED TO THE LENGTH SPECIFIED IN THE MANUFACTURER’S INSTALLATION MANUAL.

7. CHOICE OF GRAY CODE, RS-232, OR ARINC 429 INTERFACE DEPENDS ON INTERFACED EQUIPMENT. ONLY ONE AIR DATA SOURCE SHOULD BE HOOKED TO THE TRANSPONDER AT A TIME.

8. REFER TO GENERAL NOTES FOR MORE INFORMATION AND REQUIREMENTS.

9. POWERING SAE 5-35 THROUGH THE SWITCHED OUTPUT IS OPTIONAL.

10. ANY AVAILABLE RS-232 PORT MAY BE USED ON THE GTX 3X5 FOR ALTITUDE OUTPUT.

11. ARINC 429 IS THE PREFERRED INTERFACE WITH THE GI 275. IF NO ARINC 429 PORTS ARE AVAILABLE, RS-232 CONNECTIONS ARE ACCEPTABLE. ANY AVAILABLE ARINC 429 OR RS-232 PORTS ON THE GI 275 CAN BE USED.

Figure B-8 GTX 33/330 - Altitude Data Source
Sheet 2 of 2

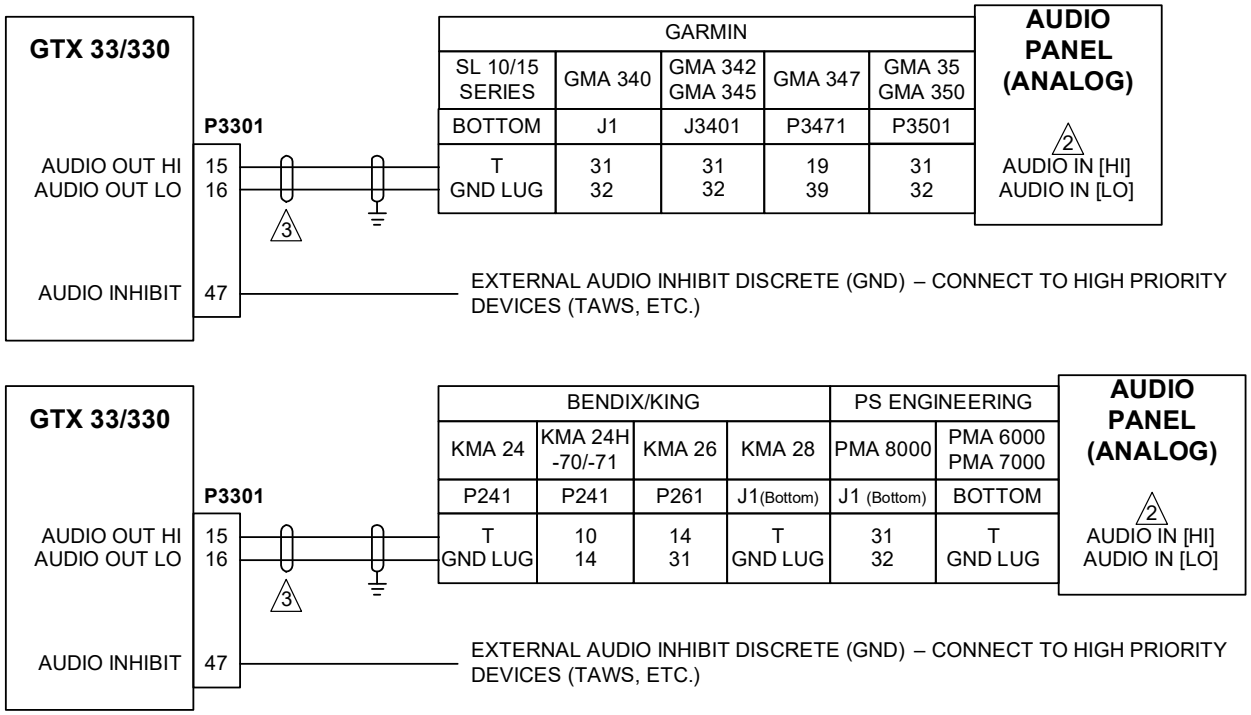

NOTES

1 REFER TO GENERAL NOTES FOR MORE INFORMATION AND REQUIREMENTS.

2 IT IS PERMITTED TO USE OTHER AVAILABLE UNSWITCHED, UNMUTED INPUTS. IF AUDIO PANEL DOES NOT HAVE AN AVAILABLE UNSWITCHED, UNMUTED INPUT, AUDIO FROM THE GTS PROCESSOR MUST BE MIXED WITH AN EXISTING AUDIO SOURCE USING RESISTORS TO ISOLATE THE AUDIO OUTPUT FROM EACH LRU. A TYPICAL VALUE FOR MIXING RESISTORS IS 390Ω ¼ W. THE AUDIO LEVELS OF EXISTING AUDIO SOURCES WILL HAVE TO BE RE-EVALUATED AFTER MIXING RESISTORS ARE INSTALLED.

3 SHIELDS FOR AUDIO CABLES SHOULD BE GROUNDED AT ONE END (WITH LEADS LESS THAN 3.0 INCHES) AND LEFT FLOATING AT THE OTHER END.

Figure B-9 GTX 33/330 - Audio Panel

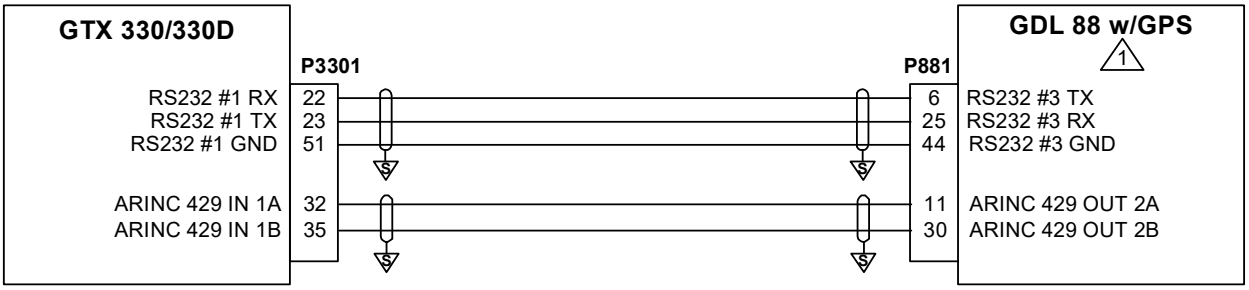

NOTES

1 THE GDL 88 WITH GPS CANNOT USE AN EXTERNAL GPS/SBAS OR INTERFACE TO A GTN.

2 REFER TO GENERAL NOTES FOR MORE INFORMATION AND REQUIREMENTS.

Figure B-10 GTX 33/330 - GDL 88 with GPS

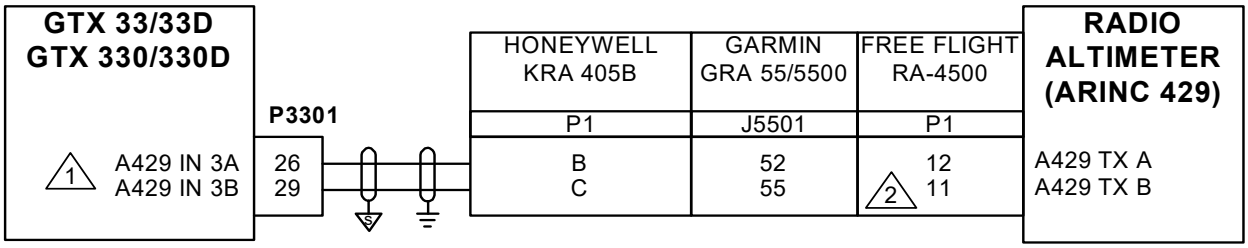

NOTES

1. IF ARINC 429 IN PORT 3 IS ALREADY USED FOR ANOTHER PURPOSE, ARINC 429 IN PORT 1 CAN BE USED.

2. ONLY APPLICABLE TO FREE FLIGHT RA-4500 (P/N 84560-X2-XXXX).

3. REFER TO GENERAL NOTES FOR MORE INFORMATION AND REQUIREMENTS.

Figure B-11 GTX 33/330 - Radio Altimeter Source

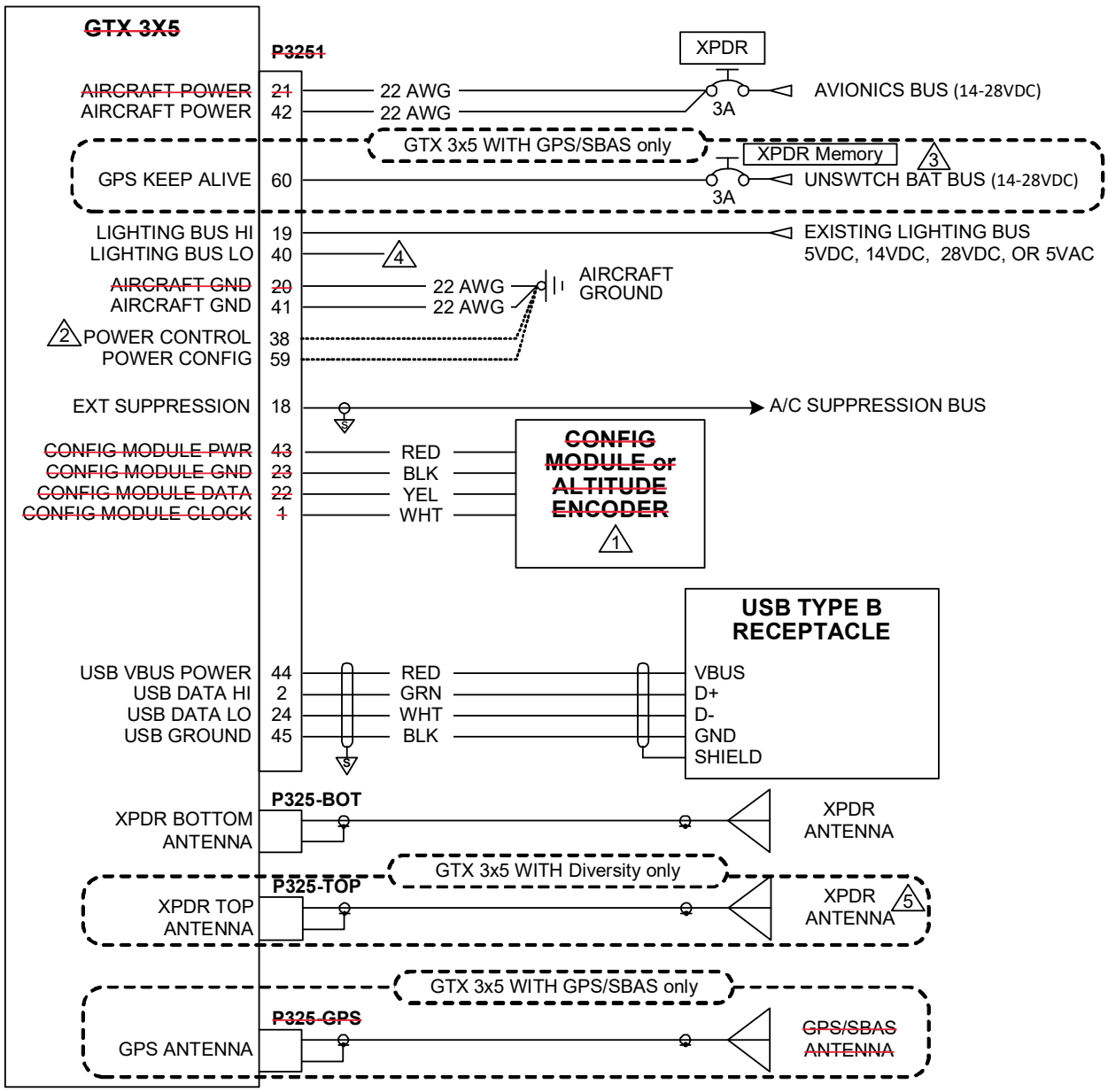

~~Figure B-12 GTX 3X5 - Power, Ground, and Configuration Module~~
~~Sheet 1 of 2~~

NOTES

1. CONFIG MODULE REQUIRES WIRING HARNESS P/N 325-00122-00. GAE PRESSURE/CONFIG MODULE REQUIRES WIRING HARNESS P/N 325-00421-00. MODULE WIRING HARNESSES ARE NOT INTERCHANGEABLE. WIRE COLOR IN MODULE WIRING HARNESS DESIGNATES FUNCTION. CONNECT MODULE WIRING HARNESS TO GTX 3X5 ACCORDING TO WIRE COLOR.

2. GROUND PIN 38 FOR REMOTE POWER ON/OFF OPERATION. REFER TO SECTION 10.2.4 FOR MORE INFORMATION.

3. GPS KEEP ALIVE IS RECOMMENDED FOR GPS INSTALLS. IF CONNECTED, GPS KEEP ALIVE MUST BE CONNECTED TO THE UNSWITCHABLE BATTERY BUS. IF NOT CONNECTED, THE GPS ACQUISITION MAY TAKE LONGER.

4. USED FOR 5 VAC LIGHTING BUS ONLY. REFER TO SECTION 10.2.3 FOR LIGHTING BUS CONNECTIONS.

5. A 50-OHM TERMINATING RESISTOR MUST BE INSTALLED IF NO ANTENNA IS CONNECTED. FAILURE TO INSTALL A TERMINATING RESISTOR WILL CAUSE THE UNIT TO REPORT AN ANTENNA FAULT EVEN IF DIVERSITY FUNCTIONALITY IS DISABLED.

6. I/O PULSES MAY NOT BE COMPATIBLE WITH ALL MODELS OF DME. THE BENDIX/KING KN 62, KN 64, AND KNS 80 HAVE AN OUTPUT-ONLY SUPPRESSION AND MAY DAMAGE THE GTX MUTUAL SUPPRESSION OUTPUT. DO NOT CONNECT THE GTX MUTUAL SUPPRESSION PIN.

Figure B-12 GTX 3X5 - Power, Ground, and Configuration Module
Sheet 2 of 2

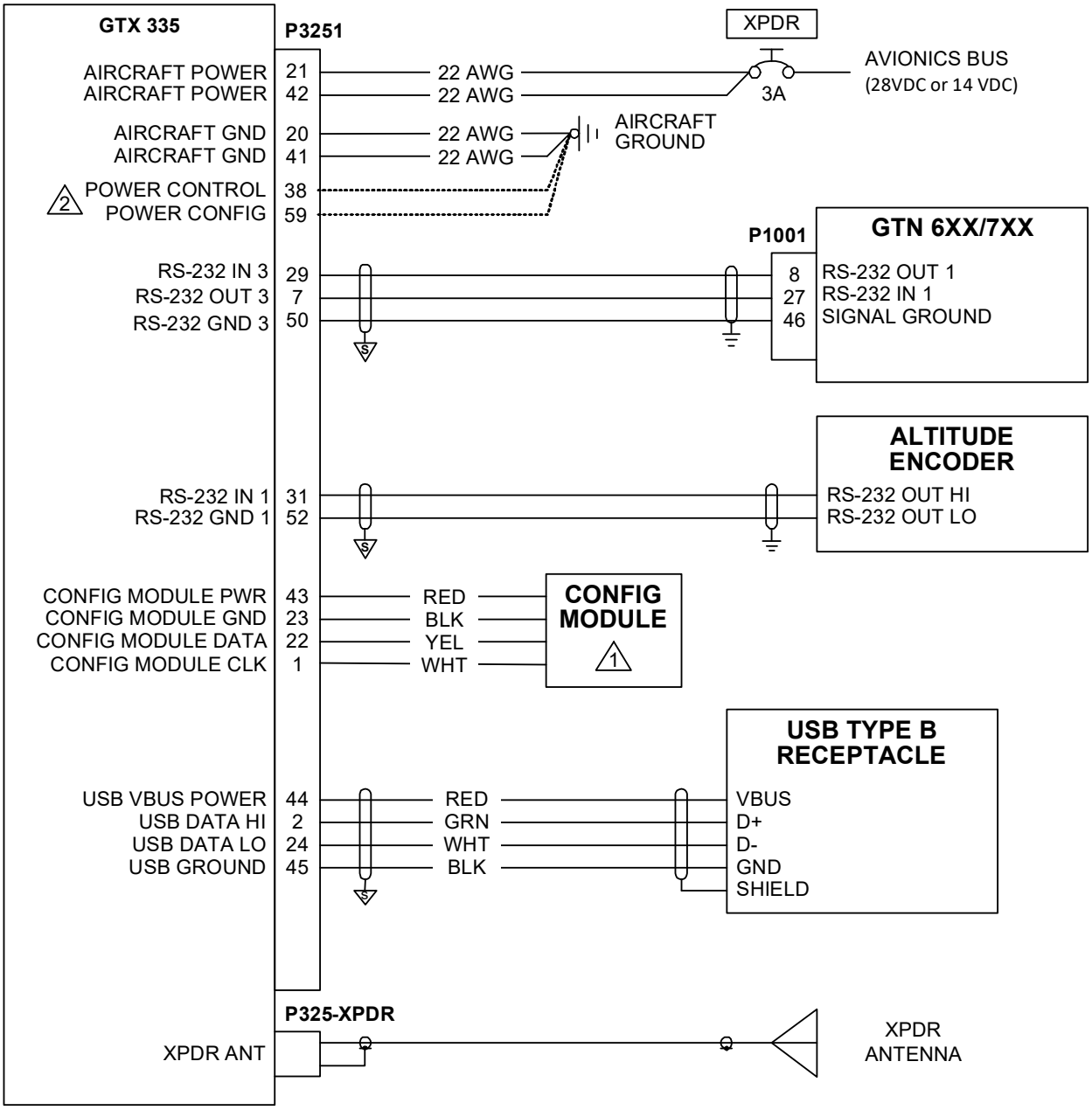

NOTES

1. CONFIG MODULE REQUIRES WIRE HARNESS P/N 325-00122-00. GAE PRESSURE/CONFIG MODULE REQUIRES WIRE HARNESS P/N 325-00421-00. MODULE WIRE HARNESSES ARE NOT INTERCHANGEABLE. WIRE COLOR IN MODULE WIRE HARNESS DESIGNATES FUNCTION. CONNECT MODULE WIRE HARNESS TO GTX 3X5 ACCORDING TO WIRE COLOR.

2. REFER TO SECTION 10.2.4 FOR DETAILS.

Figure B-13 GTX 335 - GTN 6XX/7XX

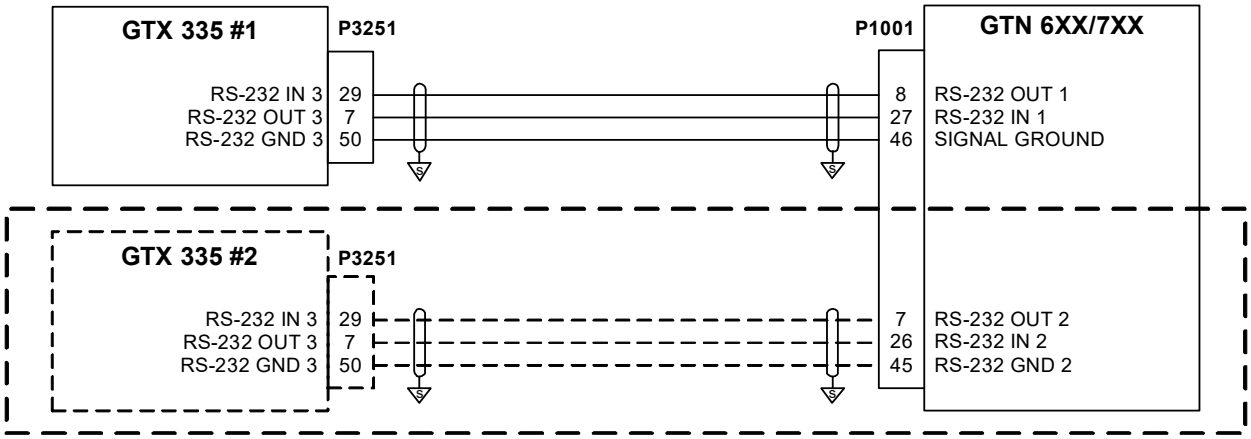

NOTES

1 DASHED AREAS INDICATE MORE INTERCONNECTS FOR DUAL INSTALLATION AND ARE NOT REQUIRED FOR SINGLE INSTALLATION.

Figure B-14 GTX 335 - Single GTN 6XX/7XX (Single/Dual GTX)

GTX 345 and 335 with GTN

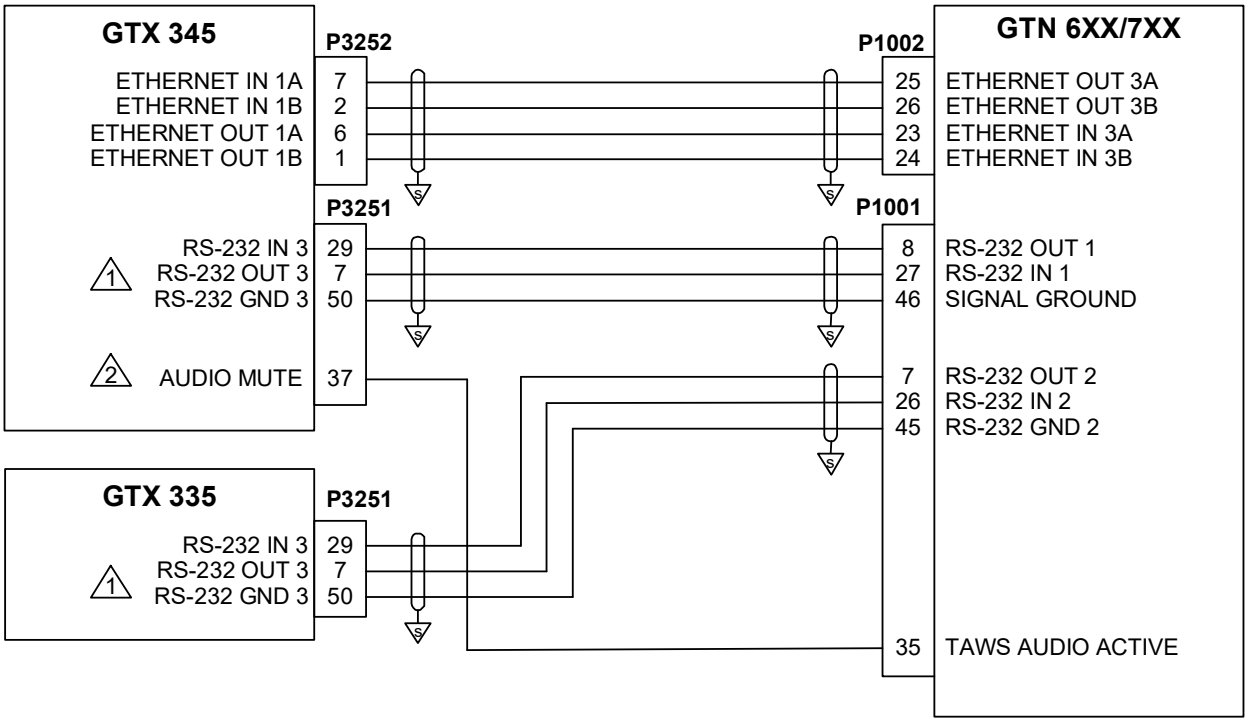

NOTES

1. RS-232 PORTS 1 THROUGH 3 AVAILABLE.

2. ANY AUDIO MUTE CONFIGURABLE DISCRETE CAN BE USED.

Figure B-15 GTX 3X5 - Single GTN 6XX/7XX / (Dual GTX)

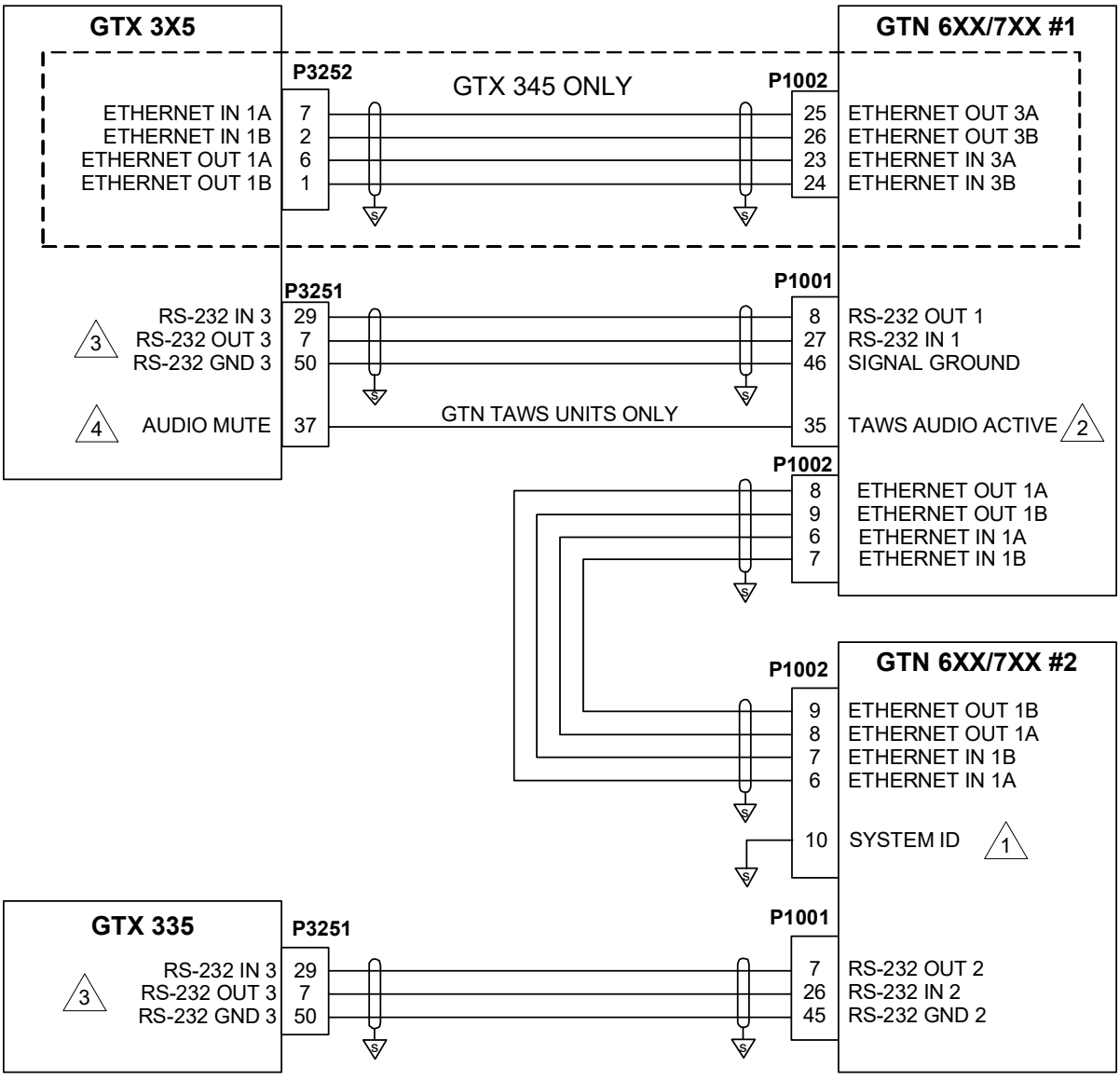

NOTES

1. WHEN GTN 6XX/7XX IS THE ONLY INSTALLED GPS NAVIGATOR, OR GPS NAVIGATOR #1 IN A DUAL GPS NAVIGATOR INSTALLATION, CONFIGURE GTN 6XX/7XX AS GTN #1 BY LEAVING SYSTEM ID (P1002-10) NOT CONNECTED. WHEN THE GTN 6XX/7XX IS GPS NAVIGATOR #2 IN A DUAL GPS INSTALLATION, CONFIGURE GTN #2 BY GROUNDING SYSTEM ID (P1002-10) 4.

2. TAWS AUDIO INHIBIT FOR GTN 6XX/7XX TAWS UNITS ONLY.

3. RS-232 PORTS 1 THROUGH 3 AVAILABLE.

4. ANY AUDIO MUTE CONFIGURABLE DISCRETE CAN BE USED.

Figure B-16 GTX 3X5 - Dual GTN / (Dual GTX)

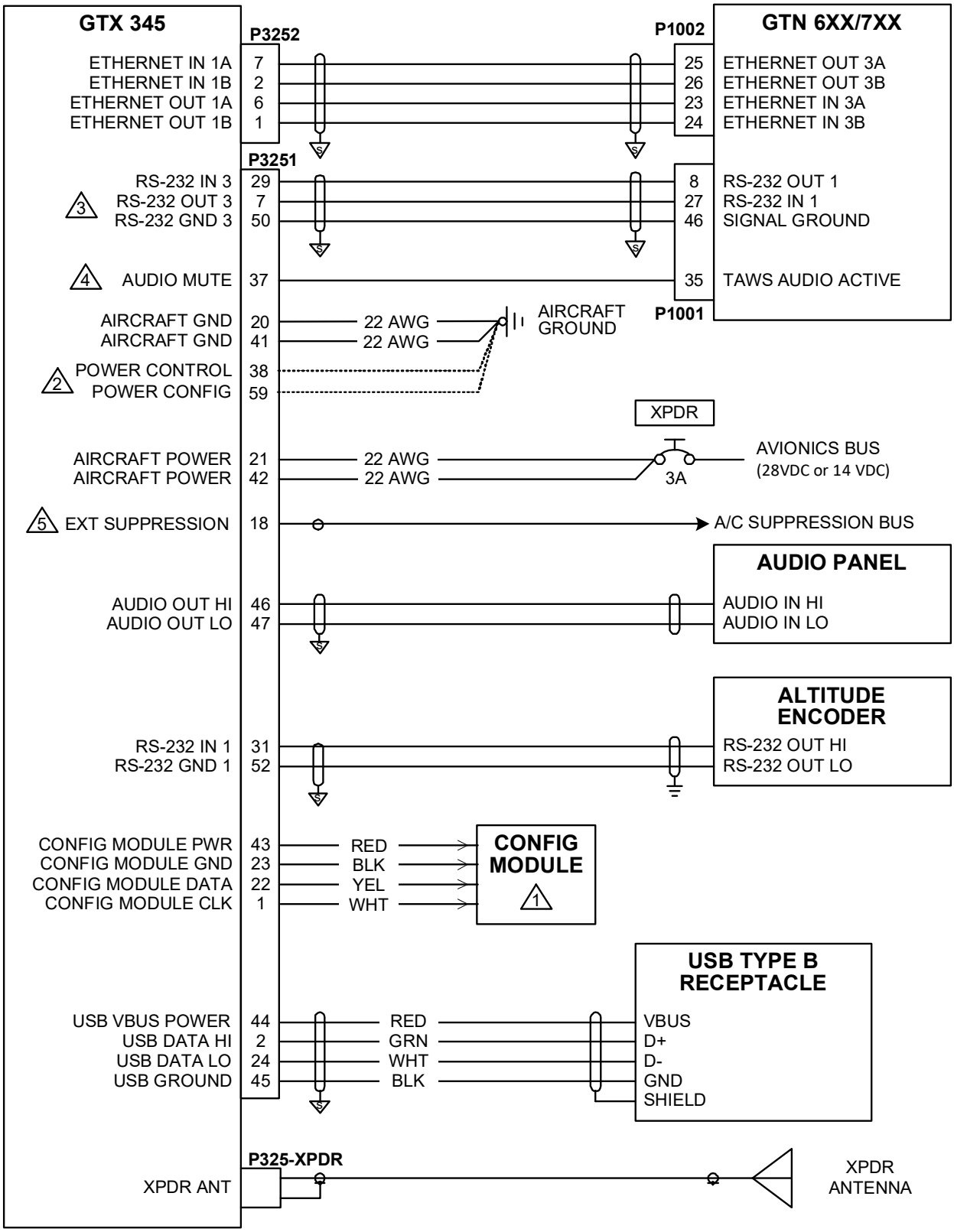

Figure B-17 GTX 345 - GTN 6XX/7XX
Sheet 1 of 2

NOTES

1. CONFIG MODULE REQUIRES WIRE HARNESS P/N: 325-00122-00. GAE PRESSURE/CONFIG MODULE REQUIRES WIRE HARNESS P/N: 325-00421-00. MODULE WIRE HARNESSES ARE NOT INTERCHANGEABLE. WIRE COLOR IN MODULE WIRE HARNESS DESIGNATES FUNCTION. CONNECT MODULE WIRE HARNESS TO GTX 3X5 ACCORDING TO WIRE COLOR.

2. REFER TO SECTION 10.2.4 FOR DETAILS.

3. RS-232 PORTS 1 THROUGH 3 AVAILABLE.

4. ANY AUDIO MUTE CONFIGURABLE DISCRETE CAN BE USED.

5. I/O PULSES MAY NOT BE COMPATIBLE WITH ALL MODELS OF DME. THE BENDIX/KING KN 62, KN 64, AND KNS 80 HAVE AN OUTPUT-ONLY SUPPRESSION AND MAY DAMAGE THE GTX MUTUAL SUPPRESSION OUTPUT. DO NOT CONNECT THE GTX MUTUAL SUPPRESSION PIN.

Figure B-17 GTX 345 - GTN 6XX/7XX
Sheet 2 of 2

SINGLE GTX 345 or GTX 345R with SINGLE GTN 6XX/7XX

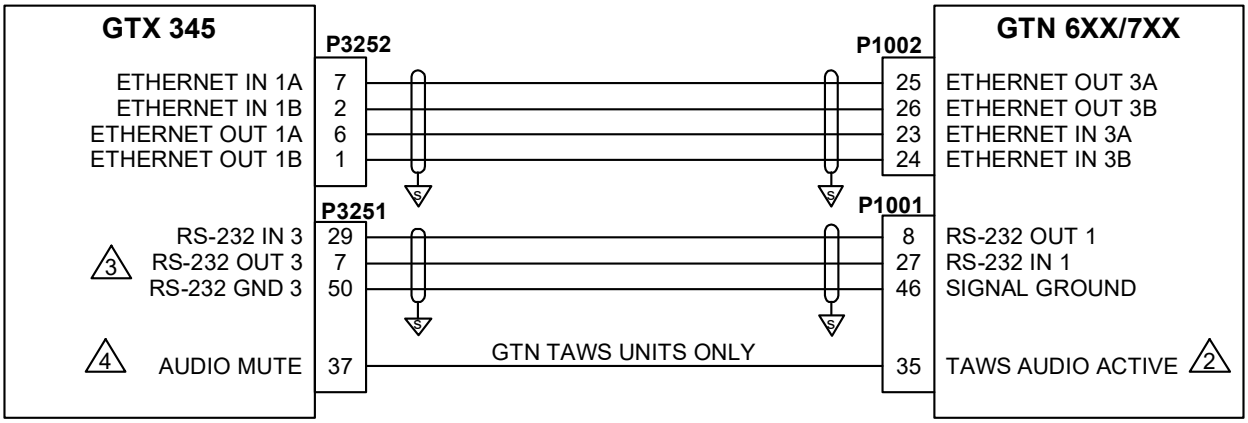

SINGLE GTX 345 or GTX 345R with DUAL GTN 6XX/7XXs

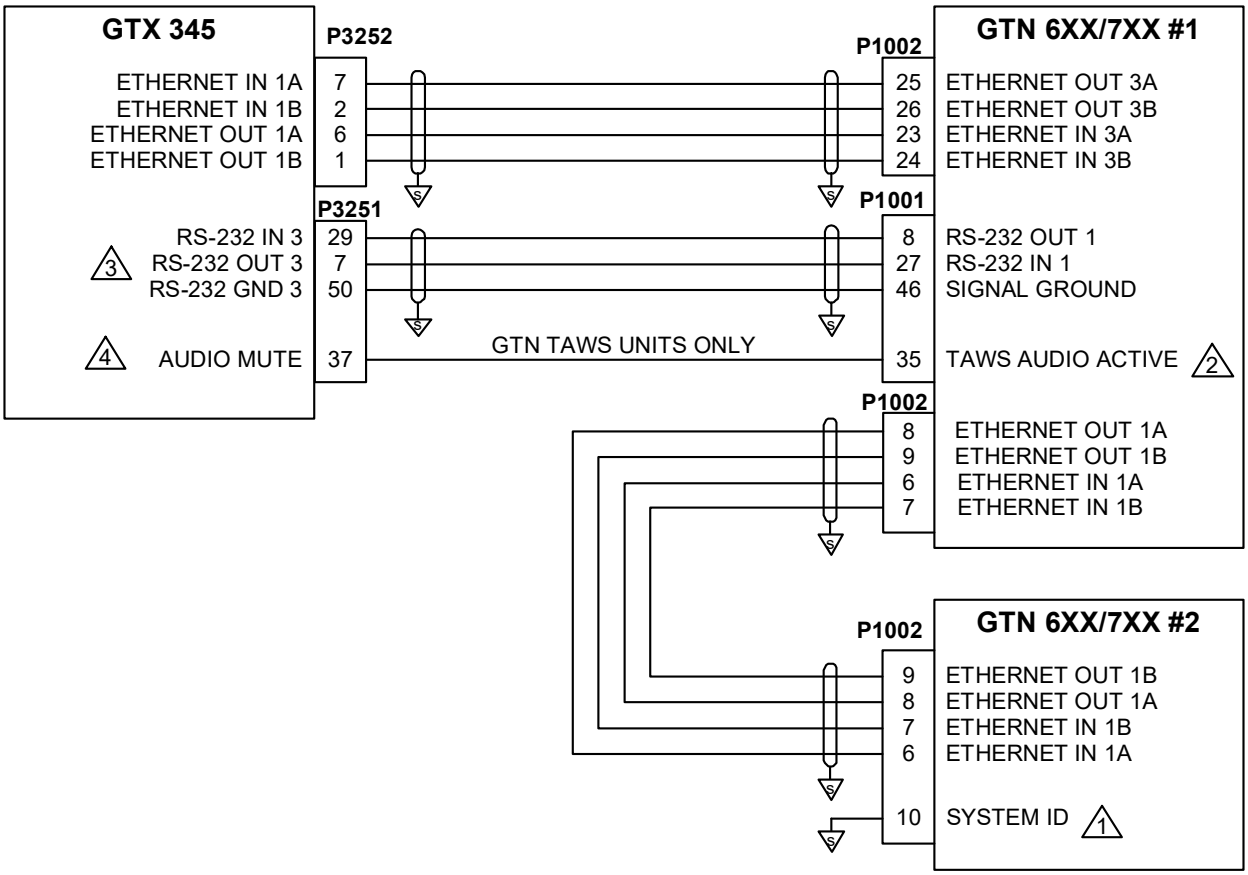

Figure B-18 GTX 345 - Single/Dual GTN 6XX/7XX
Sheet 1 of 2

NOTES

1. WHEN GTN 6XX/7XX IS THE ONLY INSTALLED GPS NAVIGATOR, OR GPS NAVIGATOR #1 IN A DUAL GPS NAVIGATOR INSTALLATION, CONFIGURE GTN 6XX/7XX AS GTN #1 BY LEAVING SYSTEM ID (P1002-10) NOT CONNECTED. WHEN THE GTN 6XX/7XX IS GPS NAVIGATOR #2 IN A DUAL GPS INSTALLATION, CONFIGURE GTN #2 BY GROUNDING SYSTEM ID (P1002-10) TO THE SHIELD BLOCK.

2. TAWS AUDIO INHIBIT FOR GTN 6XX/7XX TAWS UNITS ONLY.

3. RS-232 PORTS 1 THROUGH 3 AVAILABLE.

4. ANY AUDIO MUTE CONFIGURABLE DISCRETE CAN BE USED.

Figure B-18 GTX 345 - Single/Dual GTN 6XX/7XX
Sheet 2 of 2

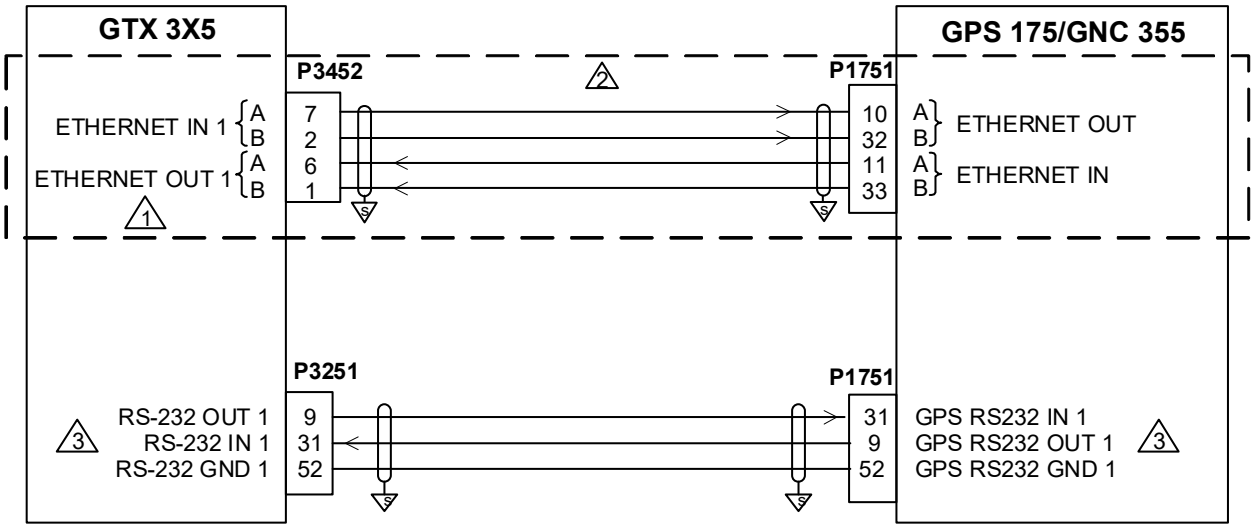

NOTES

1. ANY AVAILABLE ETHERNET PORT MAY BE USED.
2. GTX 345/345D ONLY.
3. ANY AVAILABLE RS-232 PORT MAY BE USED.
4. REFER TO THE GENERAL NOTES IDENTIFIED AT THE START OF THIS APPENDIX FOR MORE INFORMATION AND REQUIREMENTS.

Figure B-19 GTX 3X5 - GPS 175/GNC 355

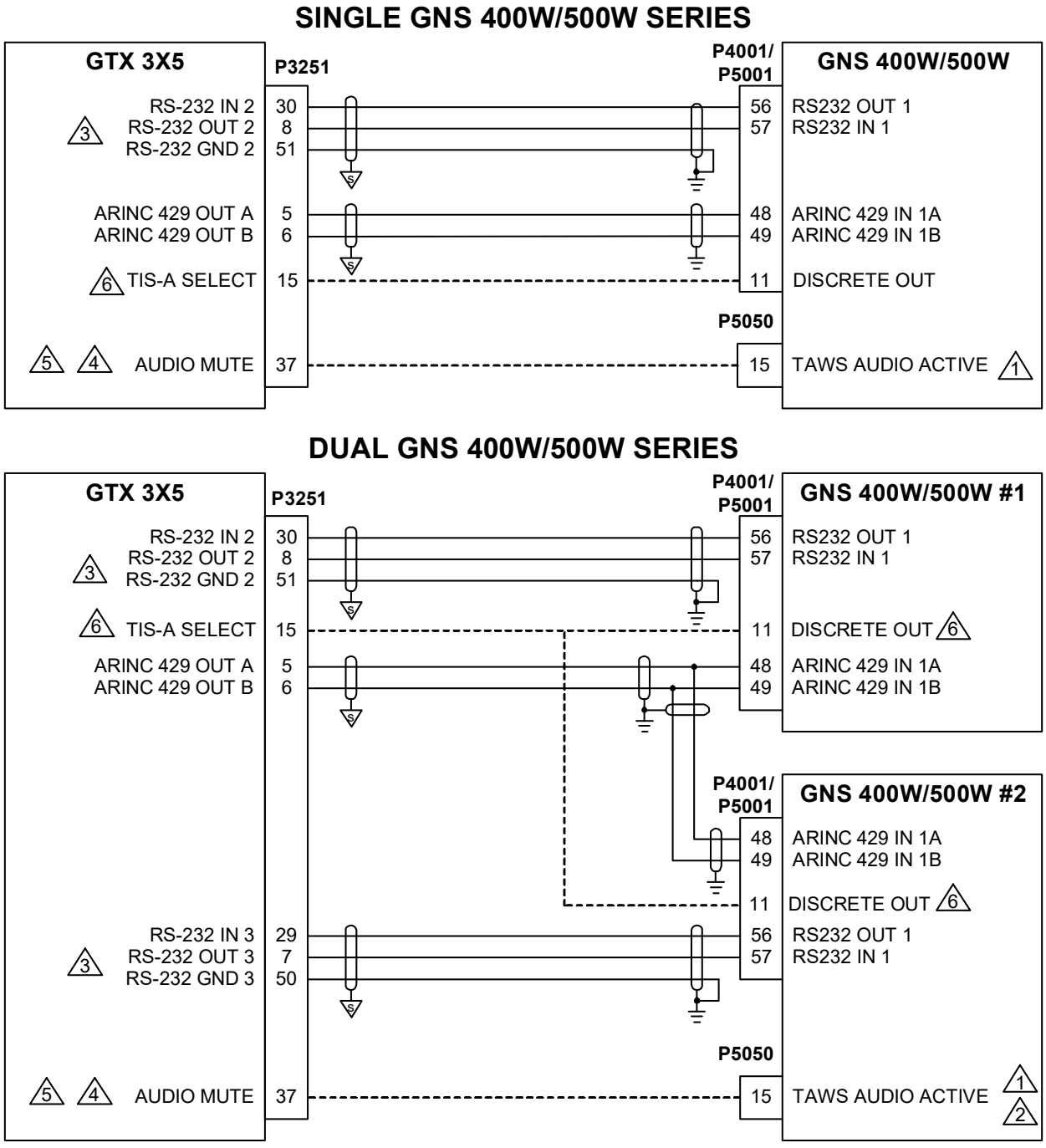

Figure B-20 GTX 3X5 - GNS 400W/500W Series
Sheet 1 of 2

NOTES

1. TAWS AUDIO INHIBIT USED WITH GNS TAWS UNITS ONLY.
2. CONNECTION CAN BE MADE TO NAVIGATOR #1 INSTEAD OF NAVIGATOR #2.
3. RS-232 PORTS 1 THROUGH 3 ARE AVAILABLE.
4. ANY AUDIO MUTE CONFIGURABLE DISCRETE CAN BE USED.
5. GTX 345 ONLY.
6. GTX 335 ONLY.

Figure B-20 GTX 3X5 - GNS 400W/500W Series
Sheet 2 of 2

GTX 345 and 335 with Single 400W/500W SERIES

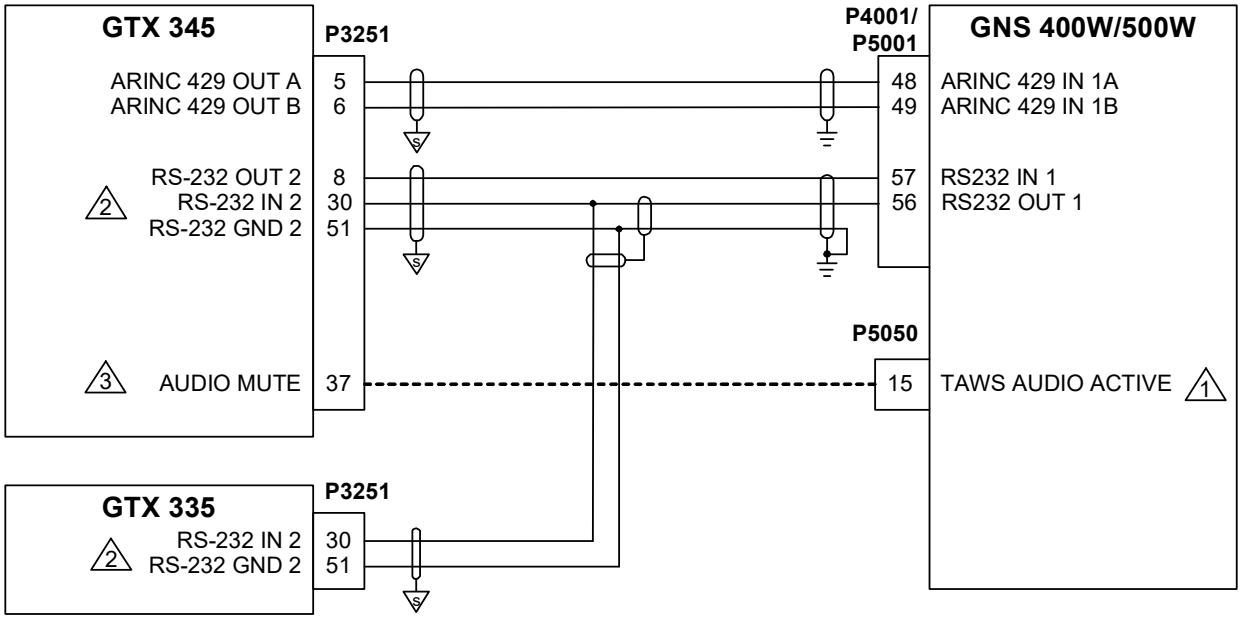

NOTES

1. TAWS AUDIO INHIBIT USED WITH GNS TAWS UNITS ONLY.
2. RS-232 PORTS 1 THROUGH 3 ARE AVAILABLE.
3. ANY AUDIO MUTE CONFIGURABLE DISCRETE CAN BE USED.

Figure B-21 GTX 345 and 335 - Single GNS 400W/500W Series

GTX 345 and 335 with DUAL GNS 400W/500W SERIES

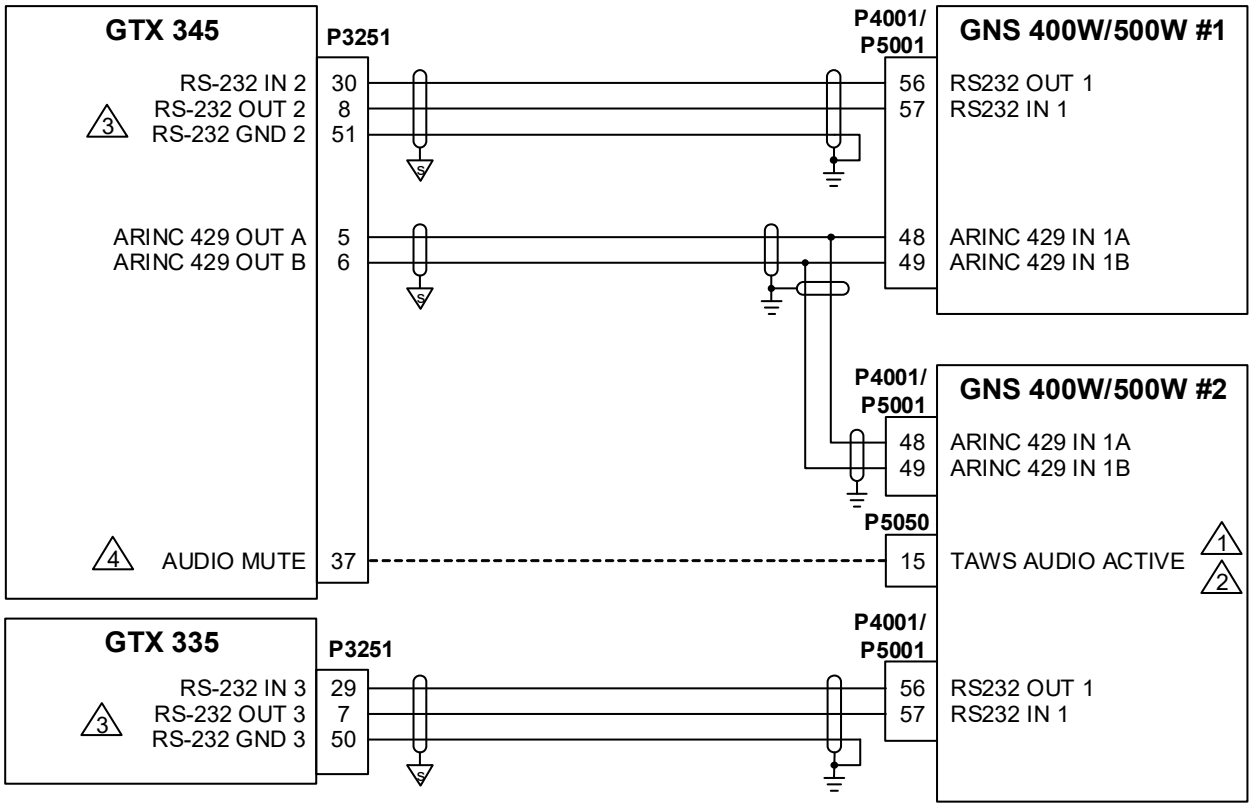

NOTES

1. TAWS AUDIO INHIBIT USED WITH GNS TAWS UNITS ONLY.
2. CONNECTION CAN BE MADE TO NAVIGATOR #1 INSTEAD OF NAVIGATOR #2.
3. RS-232 PORTS 1 THROUGH 3 ARE AVAILABLE.
4. ANY AUDIO MUTE CONFIGURABLE DISCRETE CAN BE USED.

Figure B-22 GTX 345 and 335 - Dual GNS 400W/500W Series

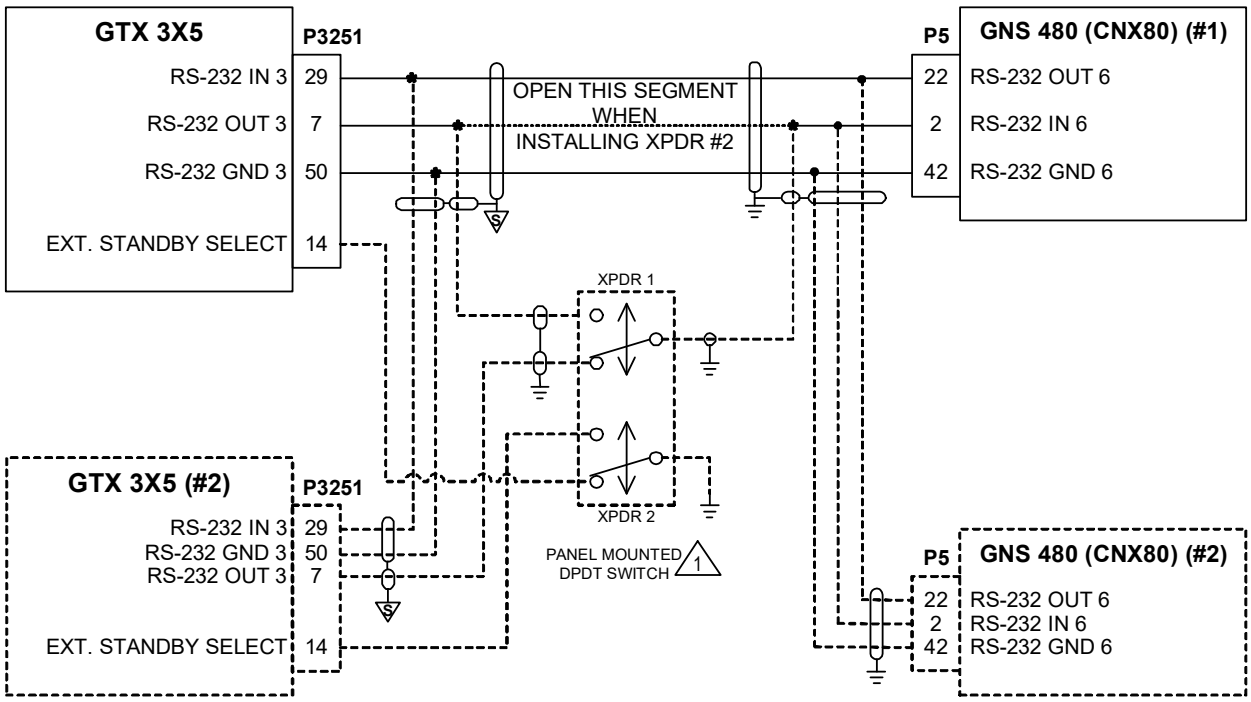

NOTES

1 WHEN INSTALLING A SECOND TRANSPONDER, A SWITCH MUST BE INSTALLED TO LET ONLY ONE TRANSPONDER TO BE ACTIVE AT A TIME. REFER TO *GNS 480 (CNX80) COLOR GPS/NAV/COM INSTALLATION MANUAL* FOR APPROVED DPDT SWITCHES.

2 DASHED LINES AND AREAS REPRESENT TRANSPONDER #2 AND GNS 480 #2 INSTALLATION INFORMATION.

Figure B-23 GTX 3X5 - GNS 480 (CNX80)

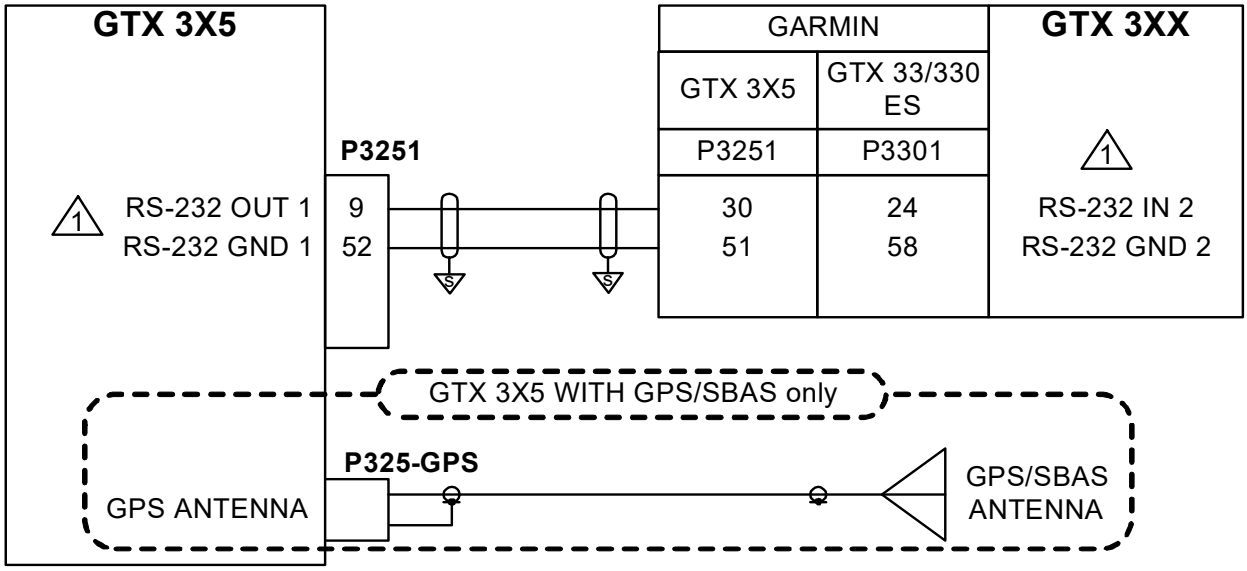

NOTE

1 FOR GTX 3X5 UNITS, RS-232 PORTS 1 THROUGH 3 ARE AVAILABLE.

Figure B-24 GTX 3X5 - Providing GPS to GTX 3XX

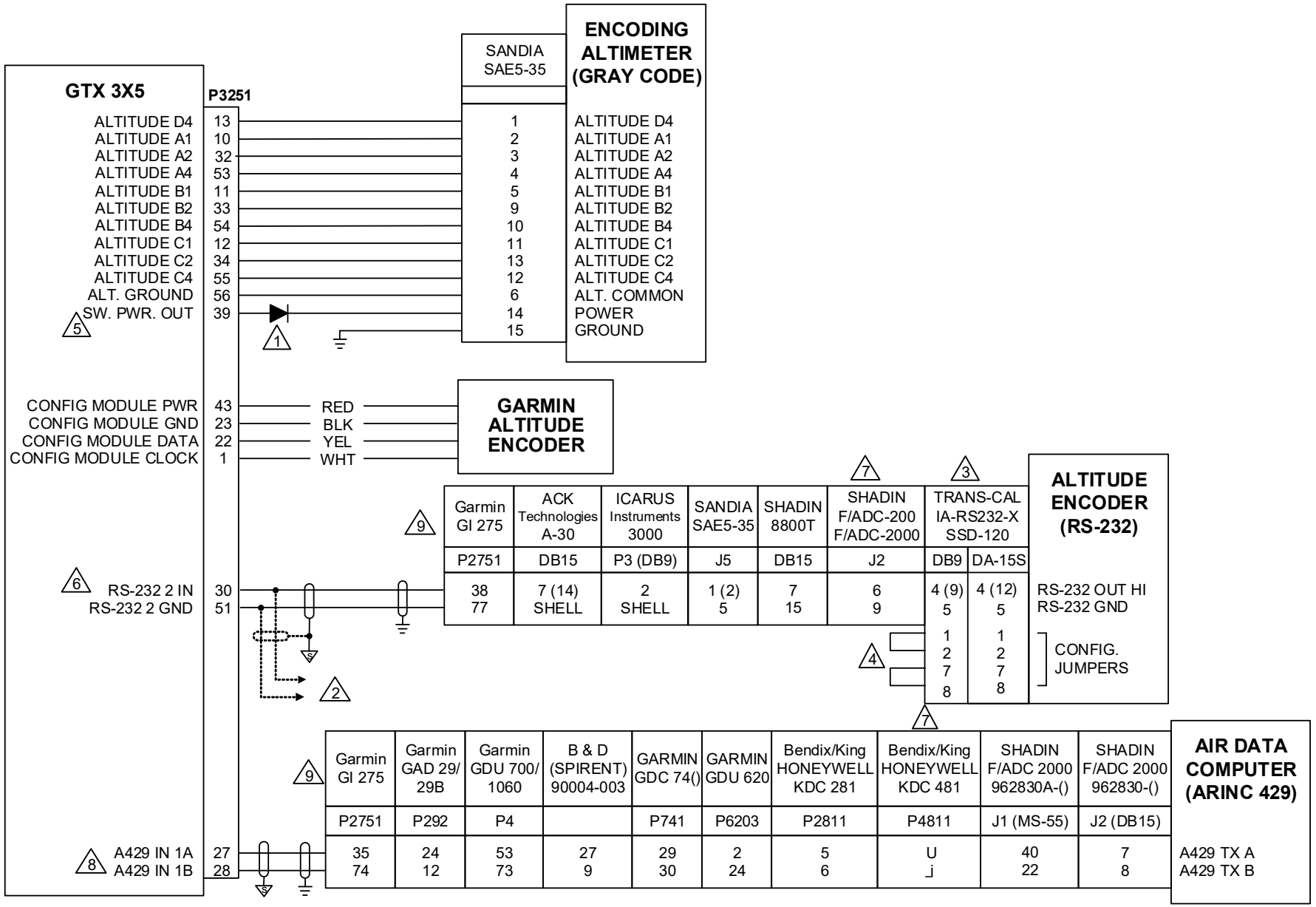

Figure B-25 GTX 3X5 - Altitude Data Source
Sheet 1 of 2

NOTES

1. USE 1N4007 DIODE FOR ENCODER POWER.
2. TO GTX #2 IF INSTALLED. RS-232 SPLICE MUST BE MADE ADJACENT TO GTX #1 CONNECTOR AS SHOWN.
3. CONFIGURE ENCODER OUTPUT TO “TRIMBLE/GARMIN 9600 BPS” FORMAT IF USING RS-232 SOFTWARE METHOD.
4. PIN 2 CAN BE LEFT OPEN IF 100’ RESOLUTION IS DESIRED (DEFAULT). LIMIT STRAP LENGTH TO SPECIFIED LENGTH IN THE MANUFACTURER’S INSTALLATION MANUAL.
5. POWERING SAE 5-35 THROUGH THE SWITCHED OUTPUT IS OPTIONAL.
6. RS-232 PORTS 1 THROUGH 3 ARE AVAILABLE.
7. FOR THE SHADIN, ONLY 1 INPUT IS NECESSARY (I.E., RS-232 OR ARINC 429, BUT NOT BOTH).
8. ARINC IN 2 CAN BE USED INSTEAD OF ARINC IN 1.
9. ARINC 429 IS THE PREFERRED INTERFACE WITH THE GI 275. IF NO ARINC 429 PORTS ARE AVAILABLE, RS-232 CONNECTIONS ARE ACCEPTABLE. CONFIGURE THE RS-232 PORT TO “SHADIN ALT”. ANY AVAILABLE ARINC 429 OR RS-232 PORTS ON THE GI 275 CAN BE USED. THE GTX 345 RECEIVES ALTITUDE DATA VIA HSDB CONNECTION, SO THIS CONNECTION IS NOT NECESSARY.

Figure B-25 GTX 3X5 - Altitude Data Source
Sheet 2 of 2

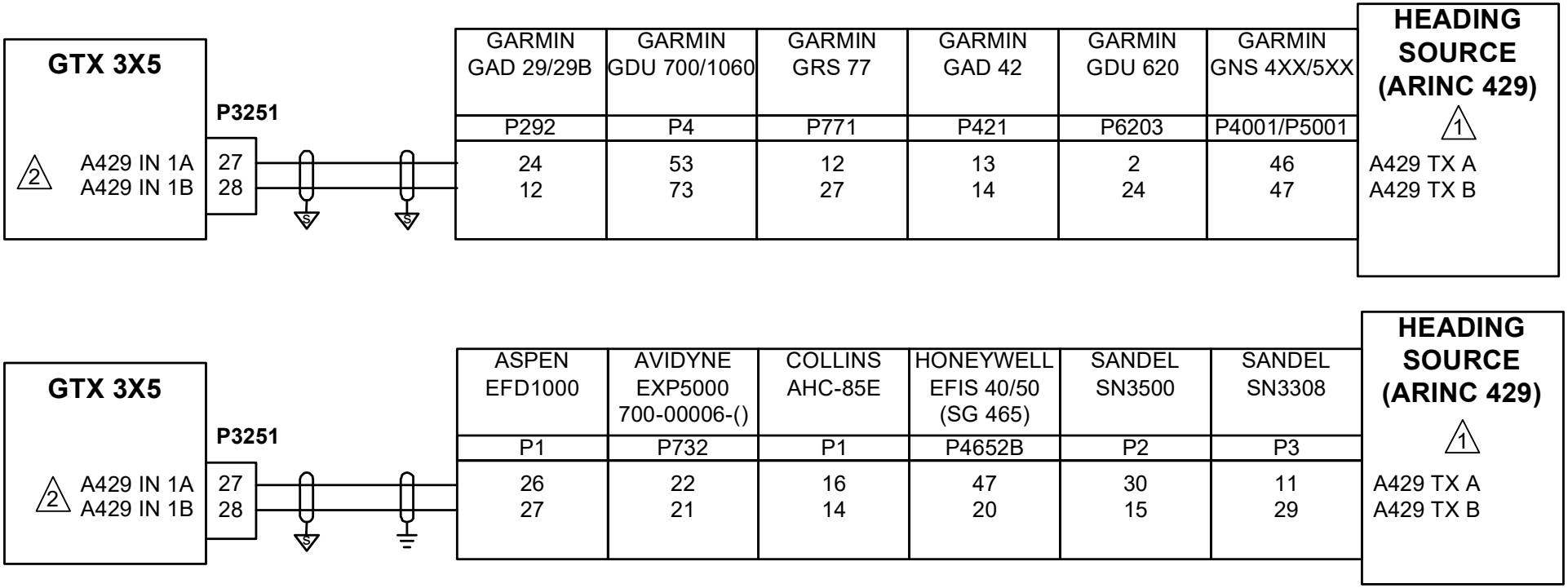

NOTES

1. SUPPORTED EQUIPMENT SHOWN CONNECTED IN PARALLEL.

2. ARINC IN 2 CAN BE USED INSTEAD OF ARINC IN 1.

Figure B-26 GTX 3X5 - AHRS Heading Data Source

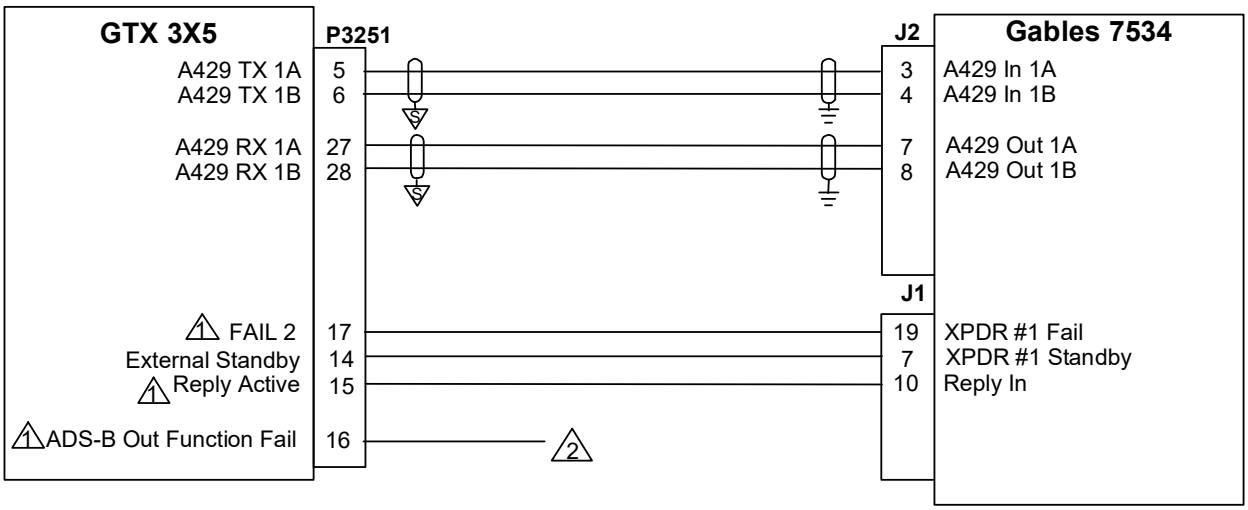

Figure B-27 GTX 3X5 - Gables 7534 Transponder Controller
Sheet 1 of 2

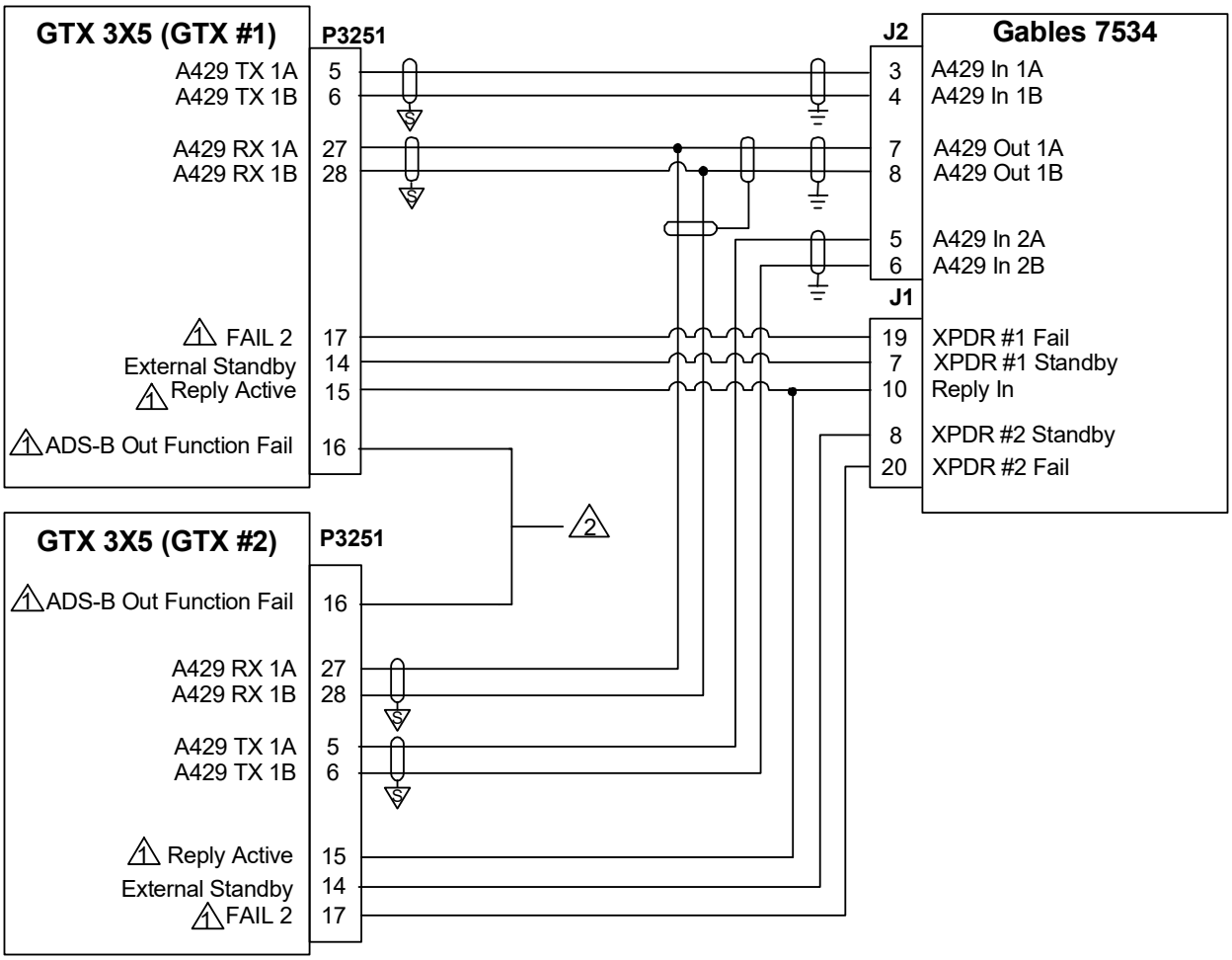

NOTES

1. CONFIGURABLE I/O DISCRETE.

2. ADSB FAIL LAMP IS REQUIRED WHEN A GABLES 7534 TRANSPONDER CONTROLLER IS BEING USED. REFER TO FIGURE B-34.

Figure B-27 GTX 3X5 - Gables 7534 Transponder Controller
Sheet 2 of 2

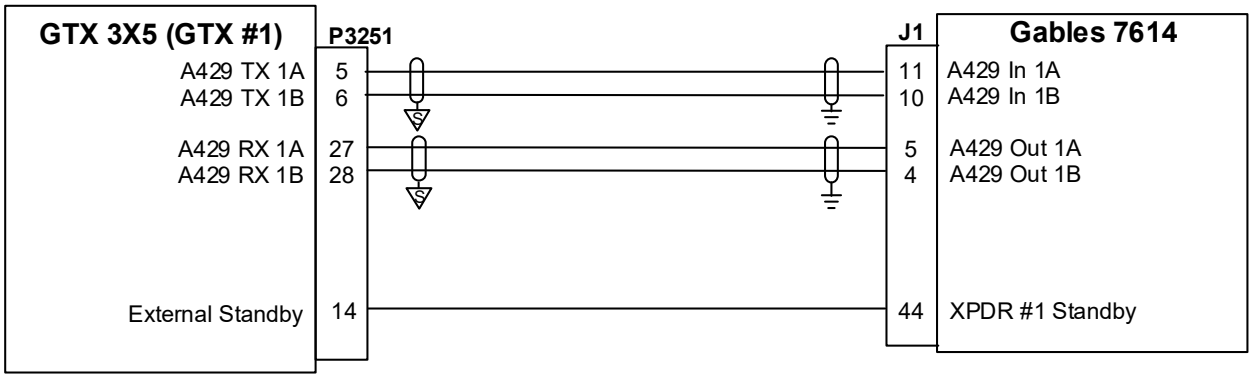

Figure B-28 GTX 3X5 - Gables 7614 Transponder Controller (Collins)
Sheet 1 of 2

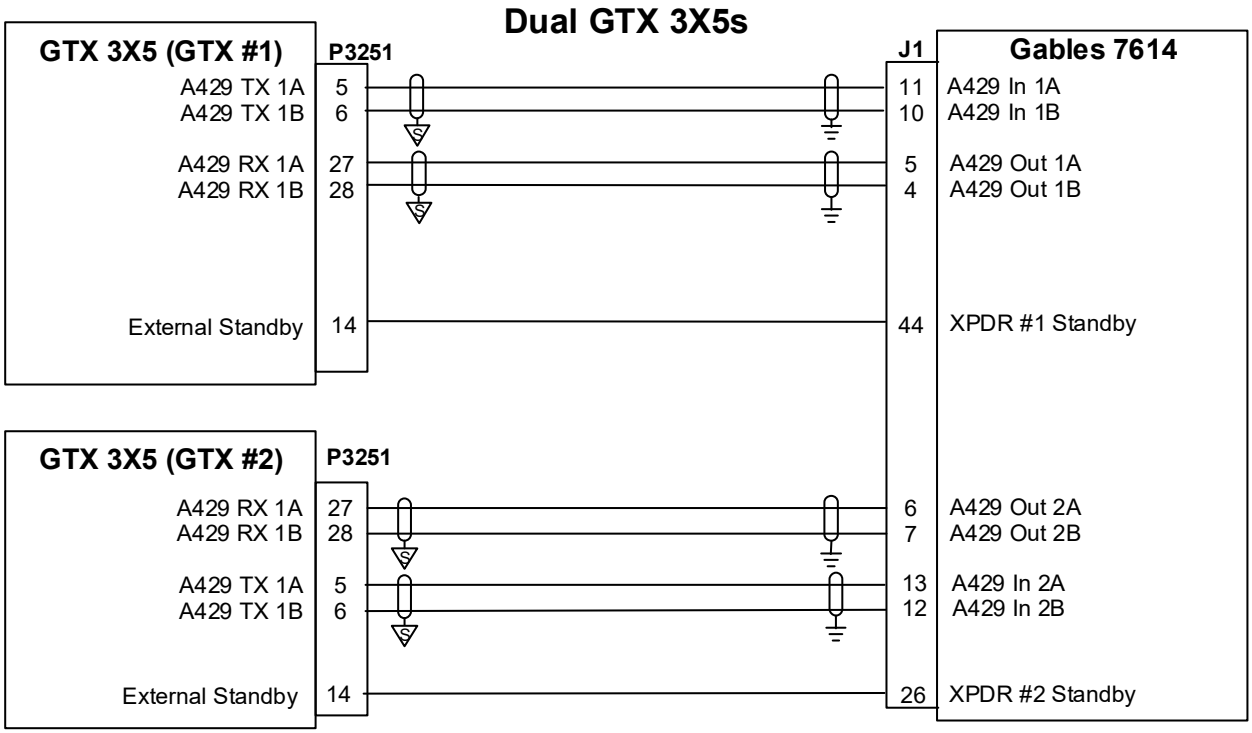

Figure B-28 GTX 3X5 - Gables 7614 Transponder Controller (Collins)
Sheet 2 of 2

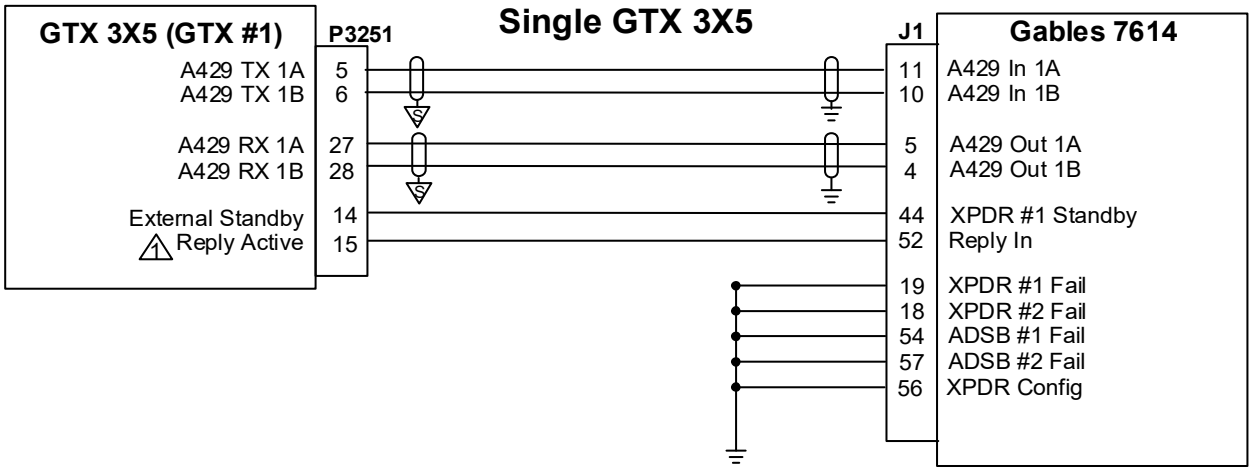

Figure B-29 GTX 3X5 - Gables 7614 Transponder Controller (Honeywell Config 1)
Sheet 1 of 2

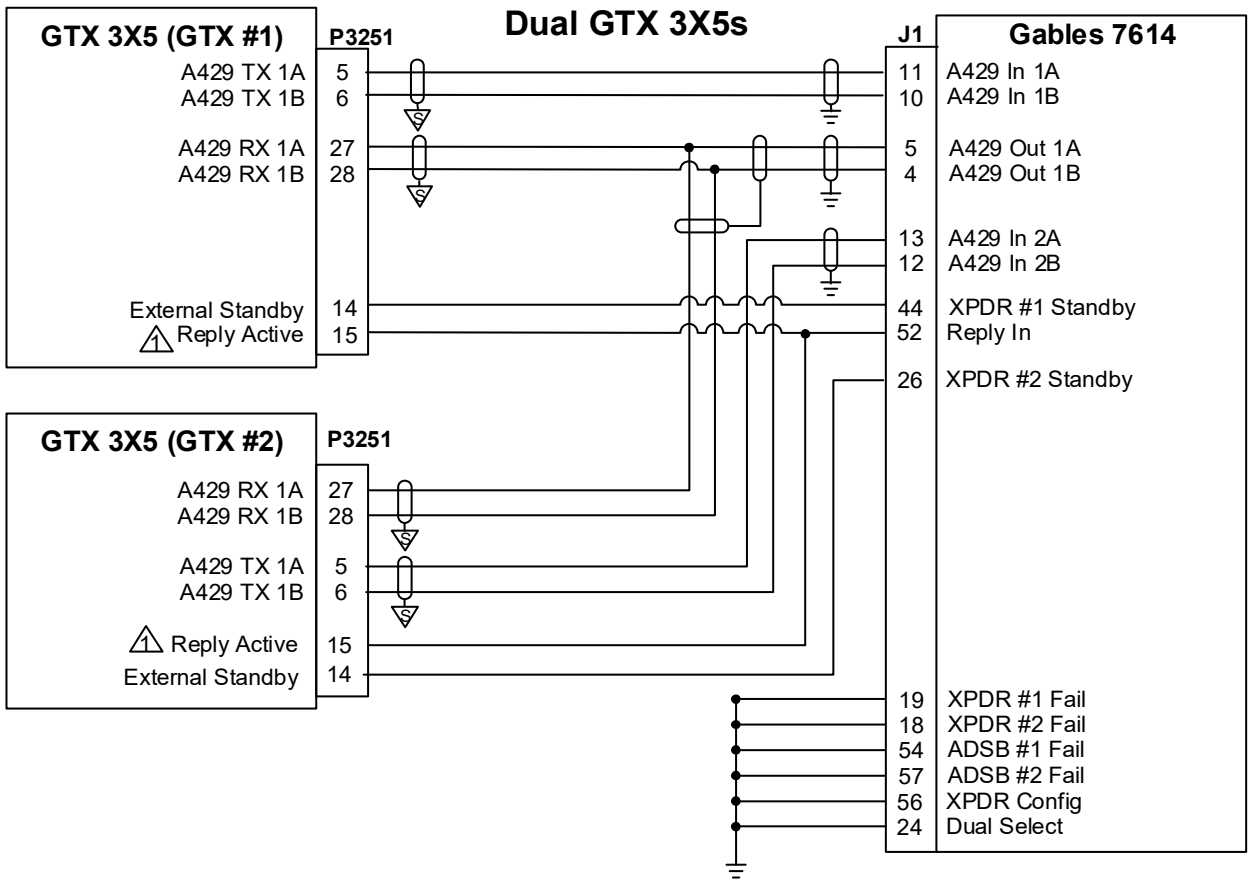

NOTES

1. CONFIGURABLE I/O DISCRETE.

Figure B-29 GTX 3X5 - Gables 7614 Transponder Controller (Honeywell Config 1)
Sheet 2 of 2

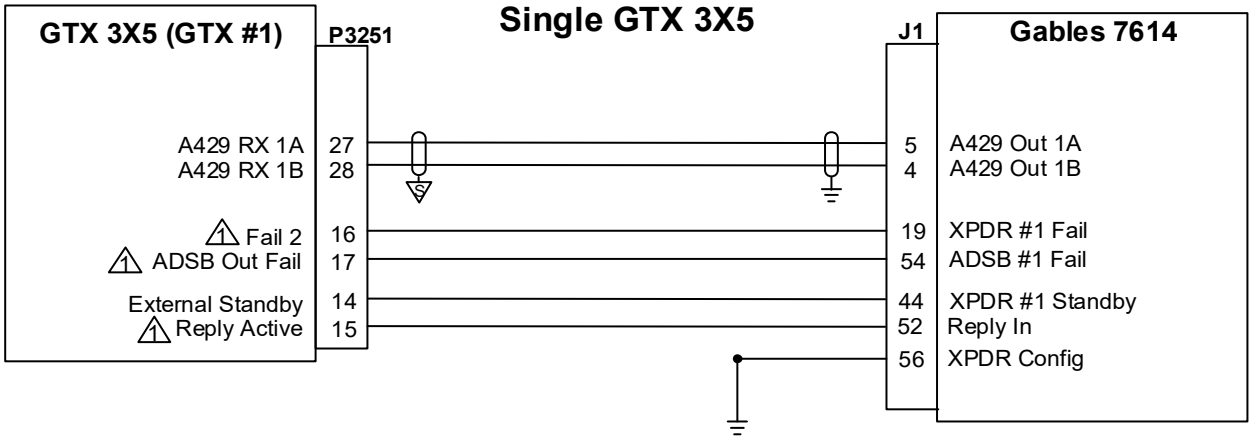

Figure B-30 GTX 3X5 - Gables 7614 Transponder Controller (Honeywell Config 2)
Sheet 1 of 2

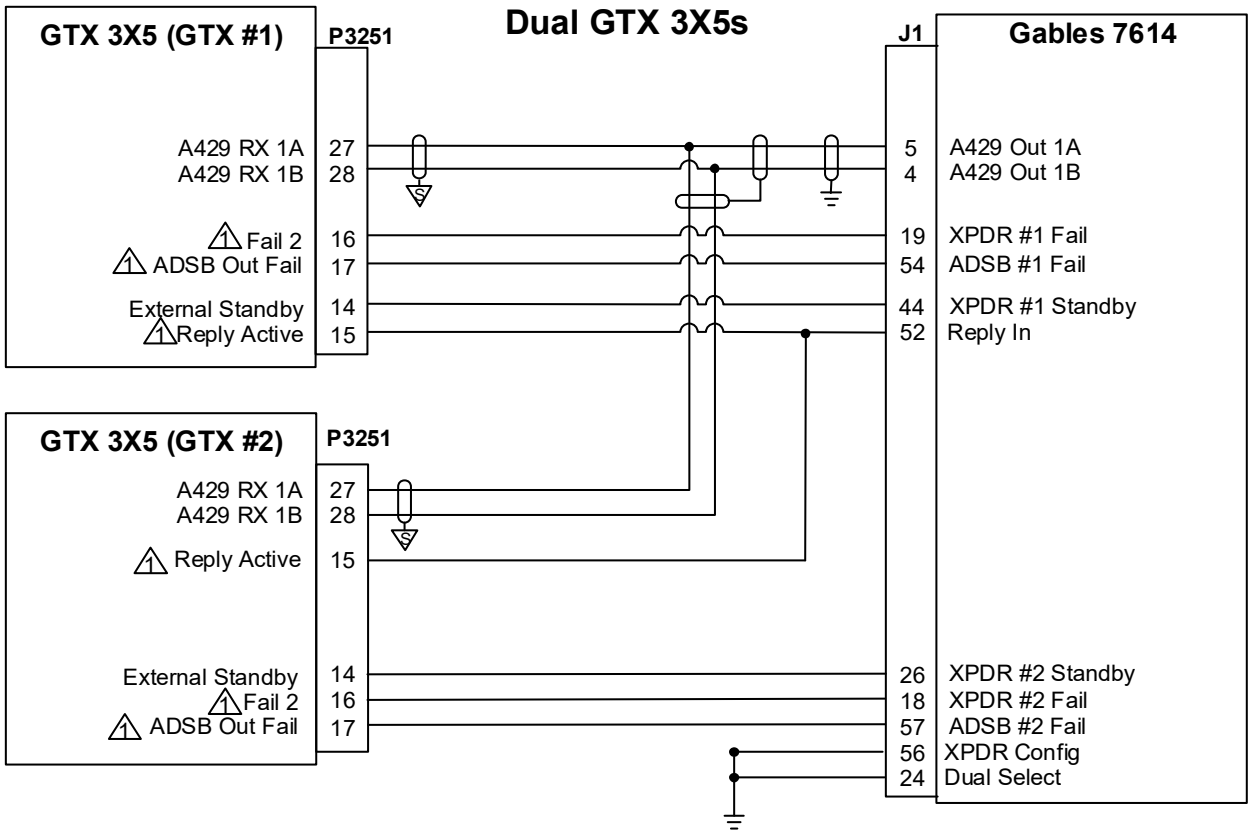

NOTES

1. CONFIGURABLE I/O DISCRETE.

Figure B-30 GTX 3X5 - Gables 7614 Transponder Controller (Honeywell Config 2)
Sheet 2 of 2

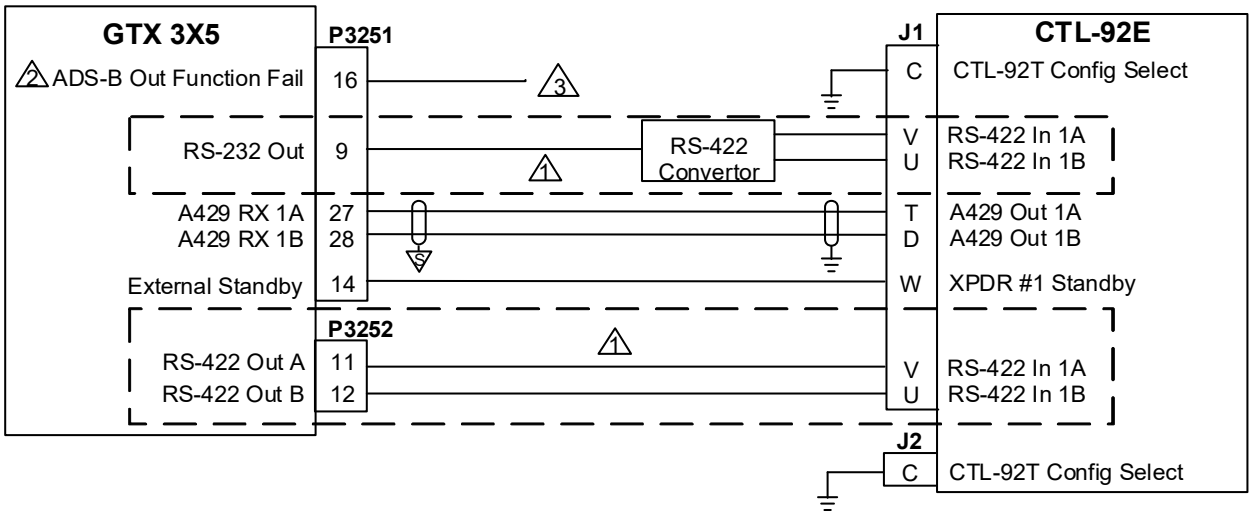

Figure B-31 GTX 3X5 - Collins CTL-92E Transponder Controller (ARINC 429)
Sheet 1 of 2

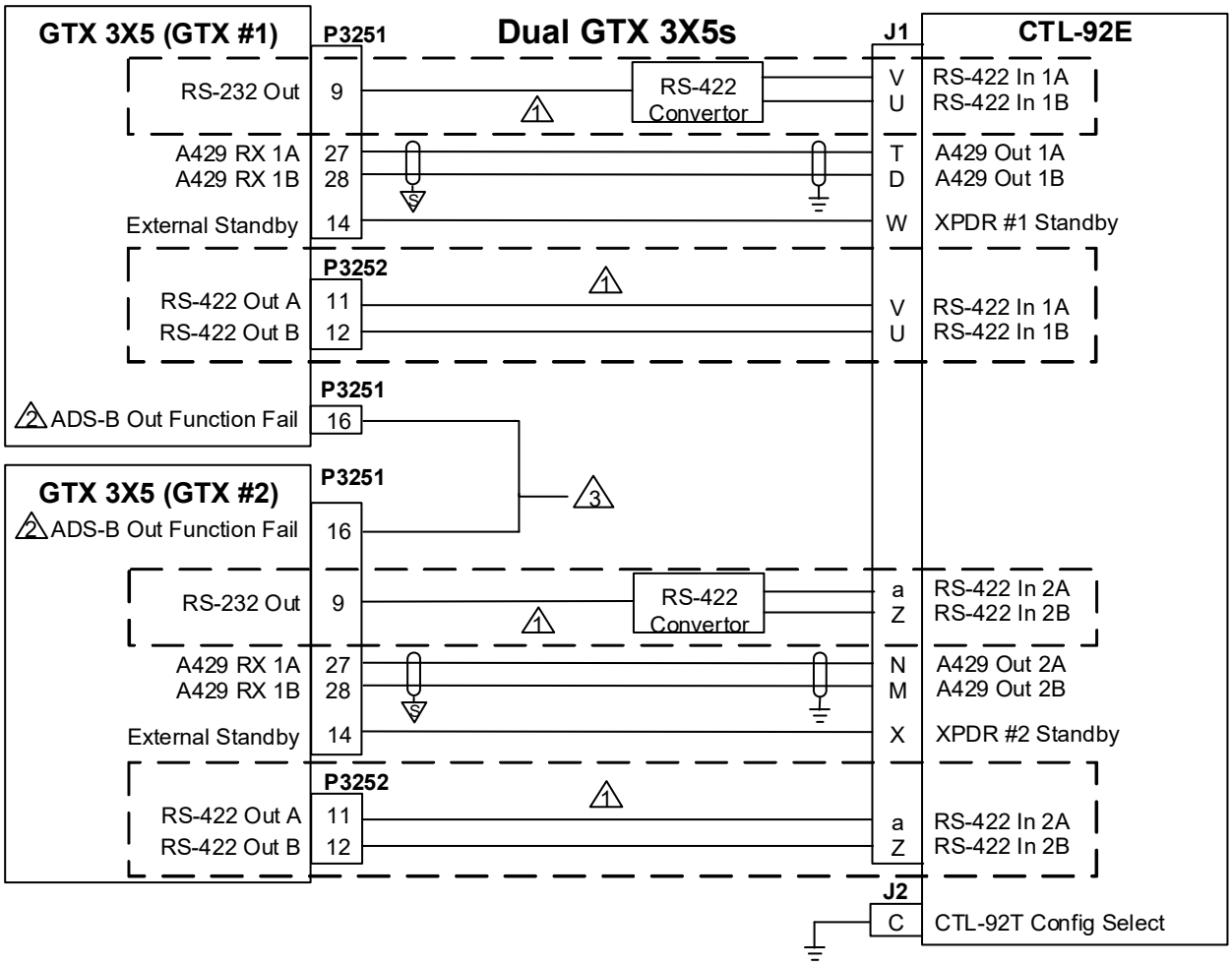

NOTES

1. THE GTX 345/345R CAN USE EITHER RS-232 OR RS-422 FOR THIS INTERFACE.

2. CONFIGURABLE I/O DISCRETE.

3. "ADSB FAIL" LAMP IS REQUIRED WHEN A CTL-92/CTL-92E TRANSPONDER CONTROLLER IS BEING USED. REFER TO FIGURE B-34 FOR MORE INFORMATION.

Figure B-31 GTX 3X5 - Collins CTL-92E Transponder Controller (ARINC 429)
Sheet 2 of 2

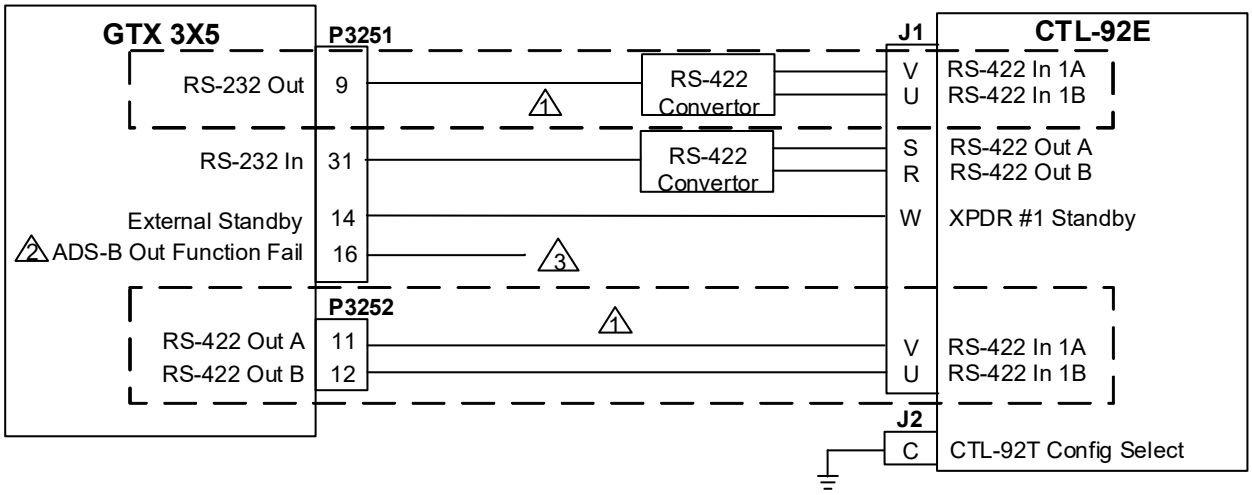

Figure B-32 GTX 3X5 - Collins CTL-92E Transponder Controller (RS-232)
Sheet 1 of 2

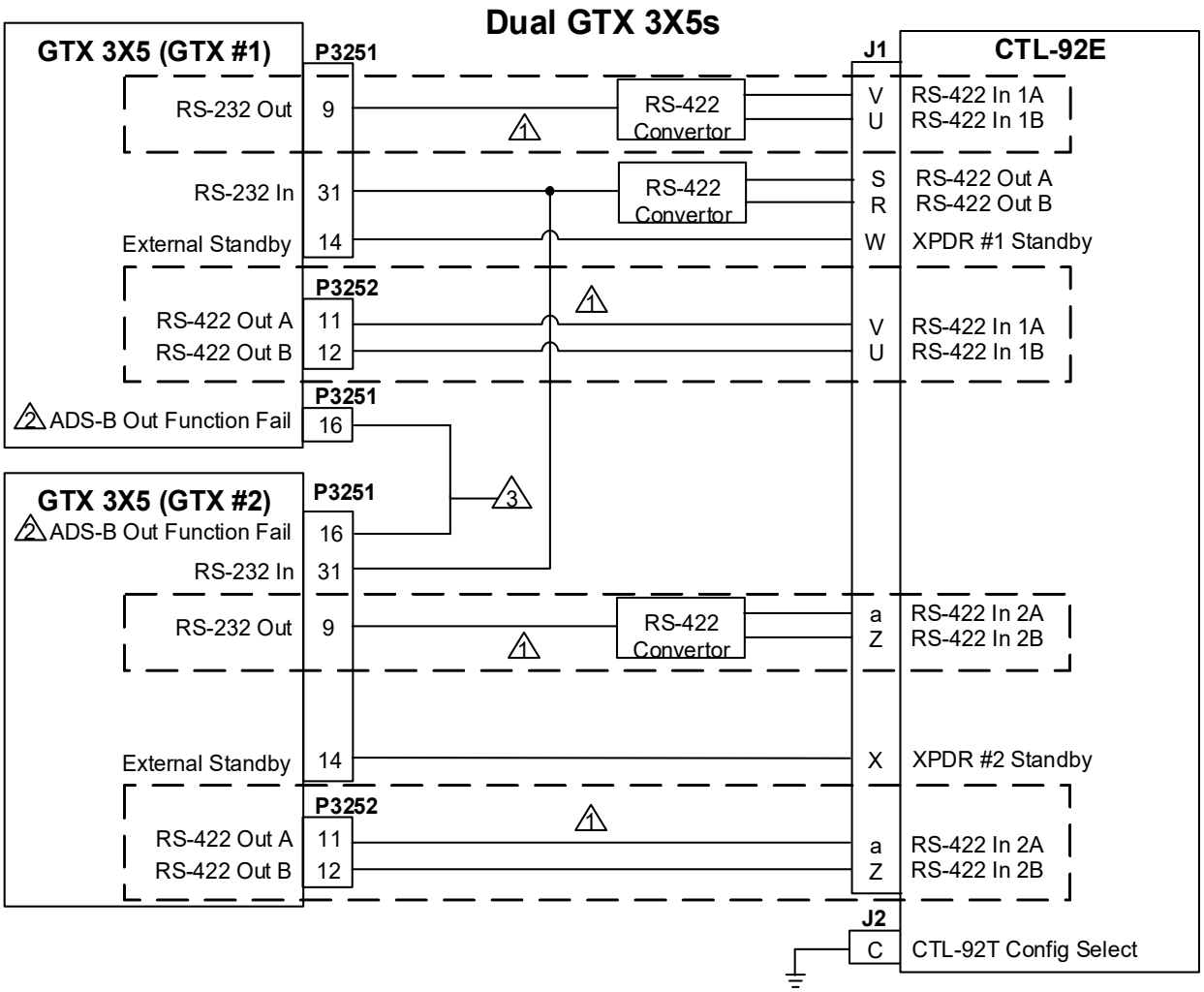

NOTES

1. THE GTX 345/345R CAN USE EITHER RS-232 OR RS-422 FOR THIS INTERFACE.

2. CONFIGURABLE I/O DISCRETE.

3. "ADSB FAIL" LAMP IS REQUIRED WHEN A CTL-92/CTL-92E TRANSPONDER CONTROLLER IS BEING USED. REFER TO FIGURE B-34 FOR MORE INFORMATION.

Figure B-32 GTX 3X5 - Collins CTL-92E Transponder Controller (RS-232)
Sheet 2 of 2

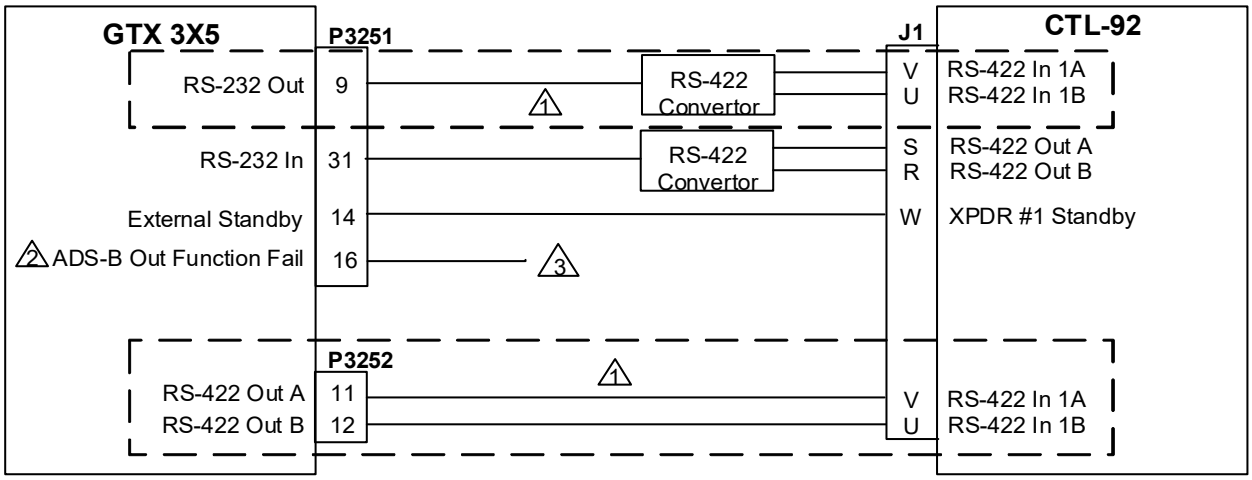

Figure B-33 GTX 3X5 - Collins CTL-92 Transponder Controller (RS-232)
Sheet 1 of 2

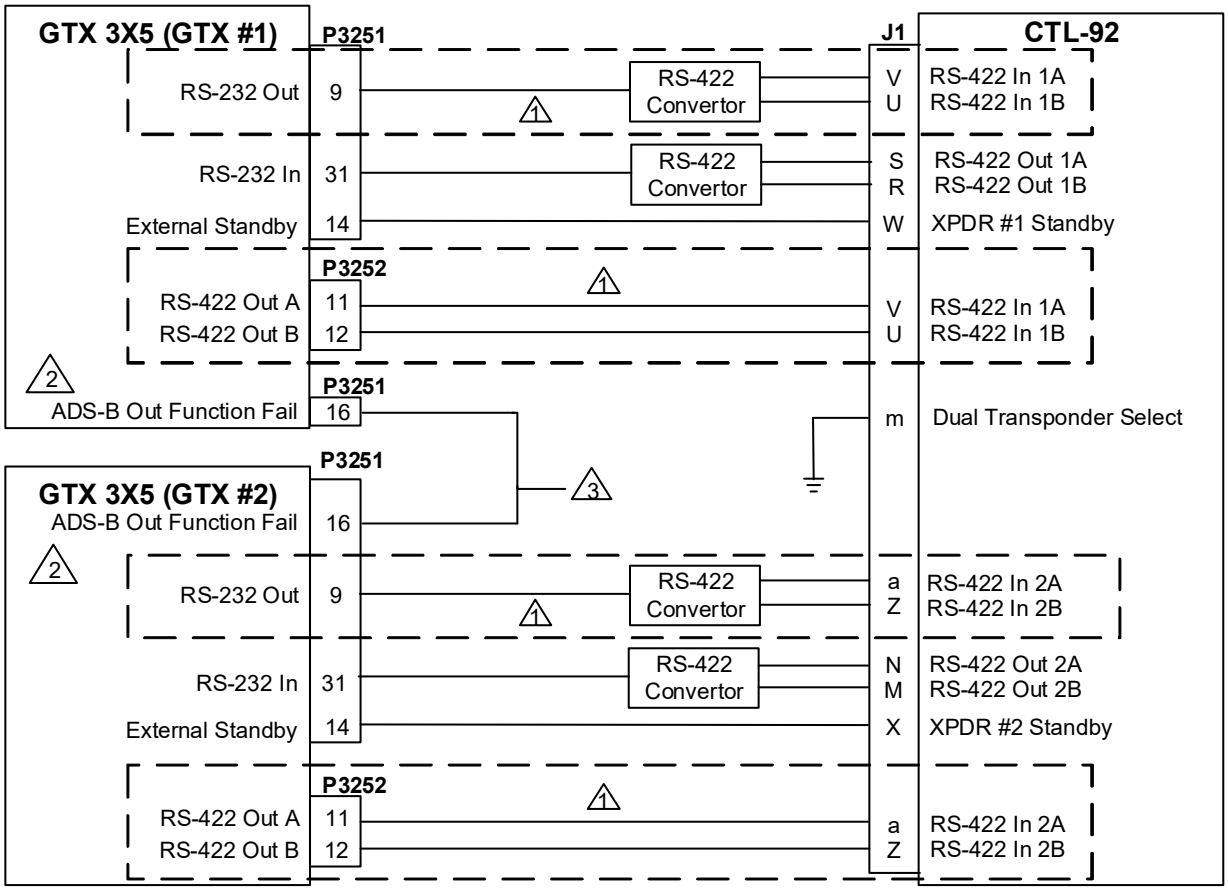

NOTES

1. THE GTX 345/345R CAN USE EITHER RS-232 OR RS-422 FOR THIS INTERFACE.

2. CONFIGURABLE I/O DISCRETE.

3. "ADSB FAIL" LAMP IS REQUIRED WHEN A CTL-92/CTL-92E TRANSPONDER CONTROLLER IS BEING USED. REFER TO FIGURE B-34 FOR MORE INFORMATION.

4. THE CTL-92/92A PART NUMBER USED MUST BE MODE S XPDR COMPATIBLE. REFER TO CTL-92 INSTALLATION DATA FOR COMPATIBLE PART NUMBERS.

Figure B-33 GTX 3X5 - Collins CTL-92 Transponder Controller (RS-232)
Sheet 2 of 2

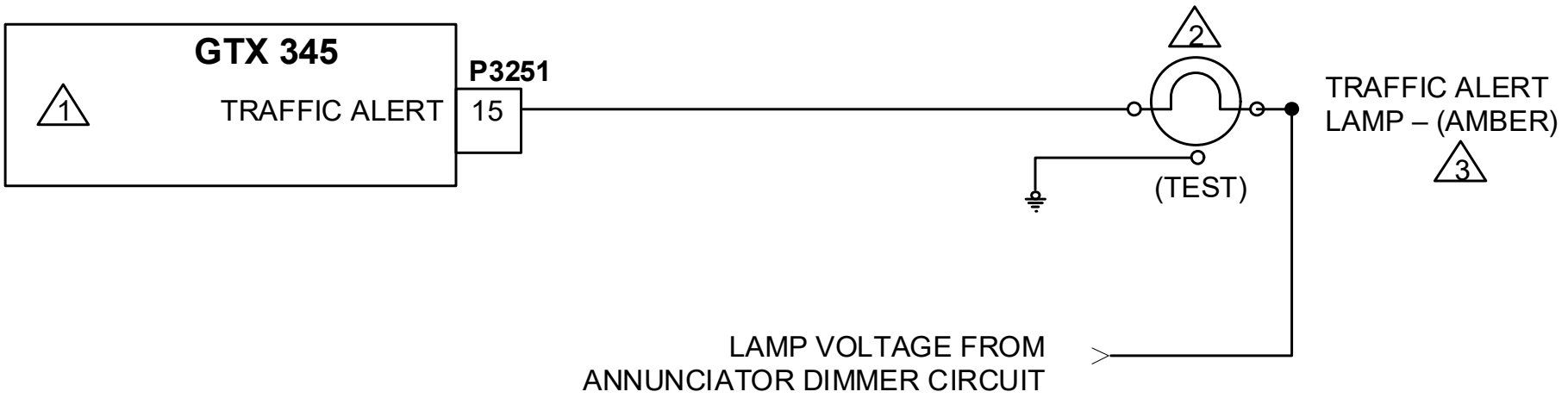

NOTES

1. CONFIGURABLE I/O DISCRETE.

2. USE MS25041-8 INDICATOR WITH MS25237-327 LAMP FOR 28VDC DIMMER, OR MS25237-330 LAMP FOR 14VDC DIMMER, OR AN EXISTING CAUTION/WARNING LIGHT IN AN EXISTING ANNUNCIATOR PANEL.
   MUST BE LABELED “TRAFFIC”.

3. “TRAFFIC” ANNUNCIATOR IS REQUIRED WHEN THERE IS NO-DISPLAY FOR TRAFFIC INSTALLATION. LAMPS ARE OPTIONAL FOR ALL OTHER INSTALLATIONS.

Figure B-34 GTX 3X5 - Traffic Annunciator Lamp

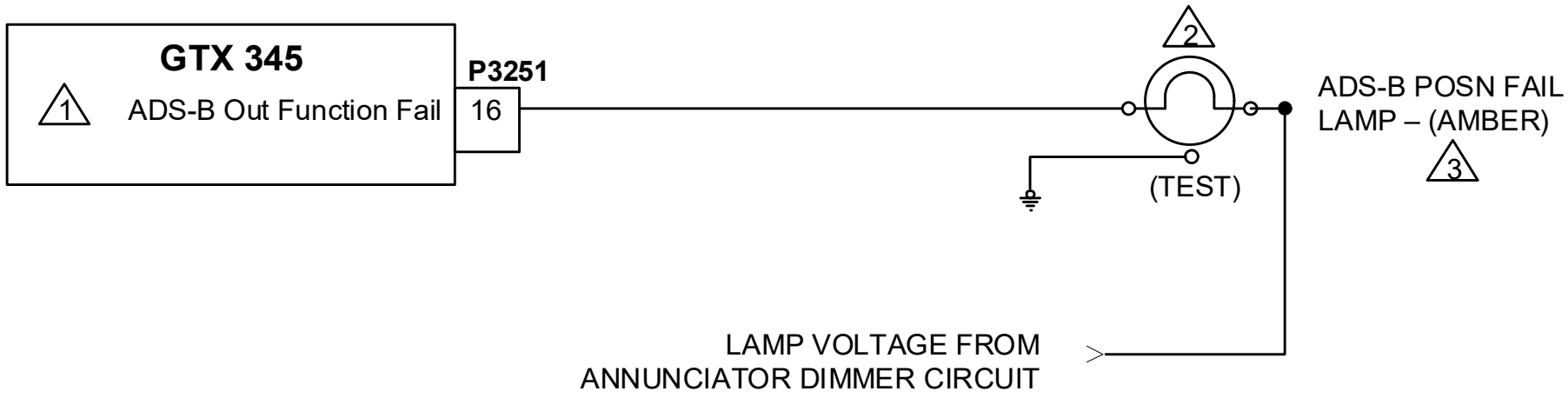

NOTES

1. CONFIGURABLE I/O DISCRETE.

2. USE MS25041-8 INDICATOR WITH MS25237-327 LAMP FOR 28VDC DIMMER, OR MS25237-330 LAMP FOR 14VDC DIMMER, OR AN EXISTING CAUTION/WARNING LIGHT IN AN EXISTING ANNUNCIATOR PANEL.
   MUST BE LABELED “ADS-B POSN FAIL”.

3. “ADS-B POSN FAIL” ANNUNCIATOR IS REQUIRED WHEN A GABLES 7534 OR CTL-92/92E TRANSPONDER CONTROLLER IS BEING USED. LAMPS ARE OPTIONAL FOR ALL OTHER INSTALLATIONS.

Figure B-35 ADS-B Out Failure Annunciator Lamp

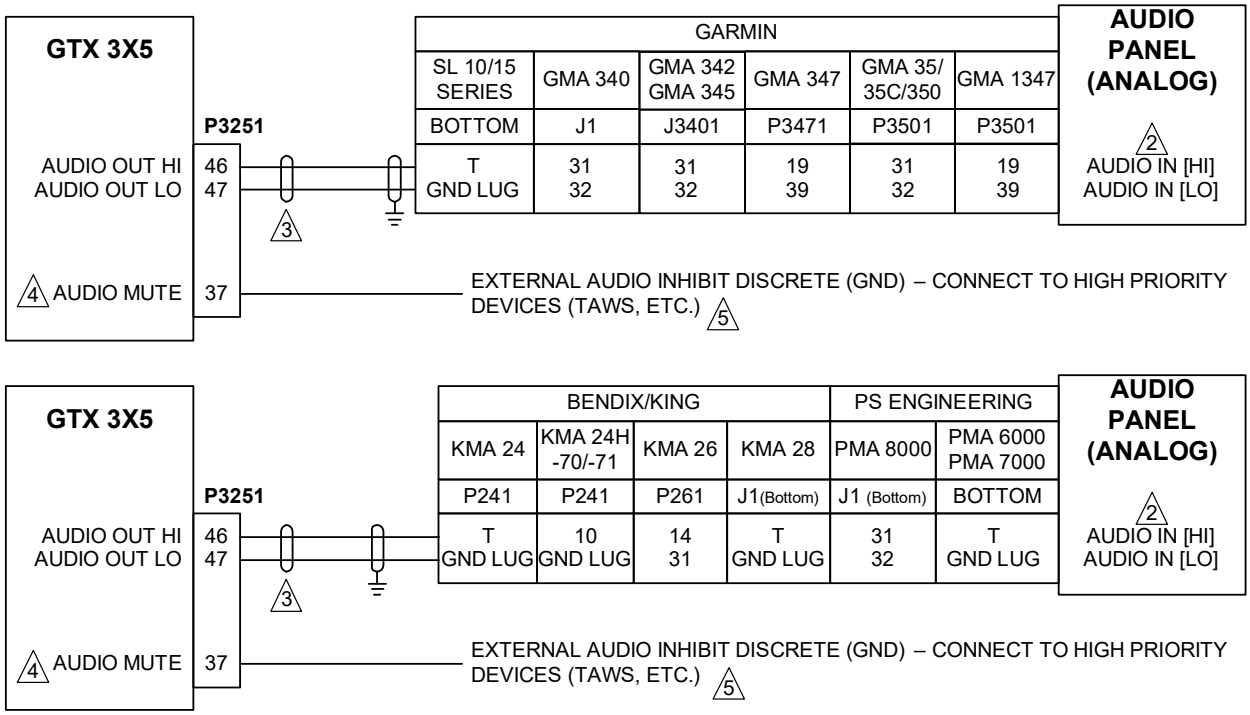

NOTES

1 REFER TO THE GENERAL NOTES AT THE BEGINNING OF THIS APPENDIX FOR MORE INFORMATION AND REQUIREMENTS.

2 IT IS PERMITTED TO USE OTHER AVAILABLE UNSWITCHED, UNMUTED INPUTS. IF THE AUDIO PANEL DOES NOT HAVE AN AVAILABLE UNSWITCHED, UNMUTED INPUT, AUDIO FROM THE GTX 3X5 MUST BE MIXED WITH AN EXISTING AUDIO SOURCE USING RESISTORS TO ISOLATE THE AUDIO OUTPUT FROM EACH LRU. A TYPICAL VALUE FOR MIXING RESISTORS IS 390Ω ¼ W. THE AUDIO LEVELS OF EXISTING AUDIO SOURCES WILL HAVE TO BE RE-EVALUATED AFTER MIXING RESISTORS ARE INSTALLED.

3 SHIELDS FOR AUDIO CABLES SHOULD BE GROUNDED AT ONE END (WITH LEADS LESS THAN 3.0 INCHES) AND LEFT FLOATING AT THE OTHER END.

4 ANY AUDIO MUTE CONFIGURABLE DISCRETE CAN BE USED.

5 FOR G950/G1000 AIRCRAFT WITH TAWS ENABLED, ENSURE THE TA MUTE FROM THE GIA TO THE GTX IS CONNECTED TO AUDIO INHIBIT 1 ON THE GIA DISCRETE OUTPUT. TYPICALLY ANNUN*5, ANNUN*15, OR ANNUN*18 ARE CONFIGURED.

Figure B-36 GTX 3X5 - Audio

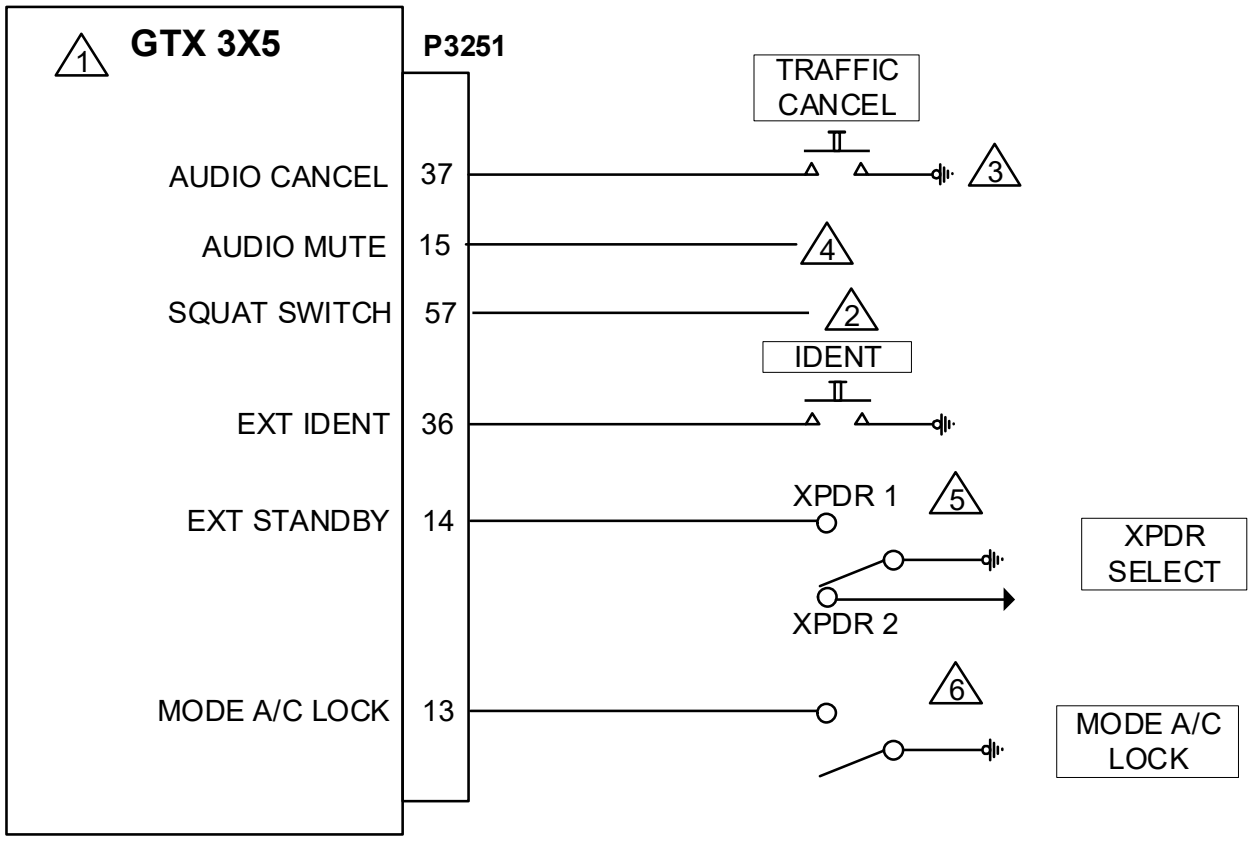

NOTES

1. CERTAIN DISCRETE I/O PINS ARE CONFIGURABLE. REFER TO PIN FUNCTION LIST FOR CONFIGURATION SELECTIONS.

2. THE SQUAT SWITCH INPUT CAN BE USED TO CONTROL AIR/GROUND STATUS. REFER TO SECTION 7.2.5 FOR MORE INFORMATION ABOUT THE INPUT SENSE CONFIGURATION.

3. AUDIO CANCEL SHOULD BE CONFIGURED WITH G950/G1000 AIRCRAFT TO INHIBIT TRAFFIC AURAL ALERT IN AN AIRPORT ENVIRONMENT.

4. THIS IS A CONFIGURABLE DISCRETE. AUDIO MUTE MUST BE WIRED TO HIGHER PRIORITY AUDIO ALERT DEVICES, SUCH AS A TAWS ENABLED DEVICE.

5. EXTERNAL STANDBY SWITCH CANNOT BE CONNECTED WHILE INTERFACED TO THE GTN OR GI 275 FOR TRANSPONDER CONTROLS.

6. REQUIRES A FEATURE ENABLEMENT. REFER TO SECTION 2.2.7 FOR MORE INFORMATION.

Figure B-37 GTX 3X5 - Switches

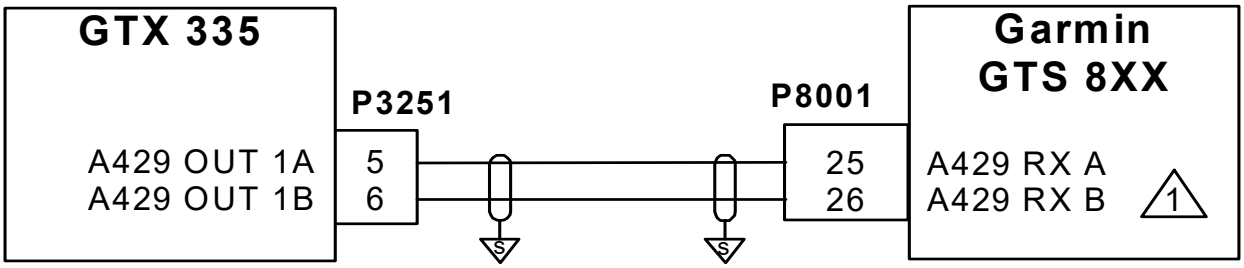

NOTES

1 THE GTS CONFIGURES AN INPUT/OUTPUT FORMAT FOR THE GTX 335. THE GTX 335 DOES NOT RECEIVE THE DATA FROM THE GTS. THE ARINC 429 OUTPUT FROM THE GTS SHOULD BE CONFIGURED FOR AN UNUSED PORT. REFER TO THE APPLICABLE GTS STC INSTALLATION MANUAL FOR CONFIGURATION PROCEDURES. GTS 8X5 (P/N 190-01279-00) OR THE GTS 8XX (P/N 190-00993-00).

Figure B-38 GTX 335 - GTS 8XX Interface

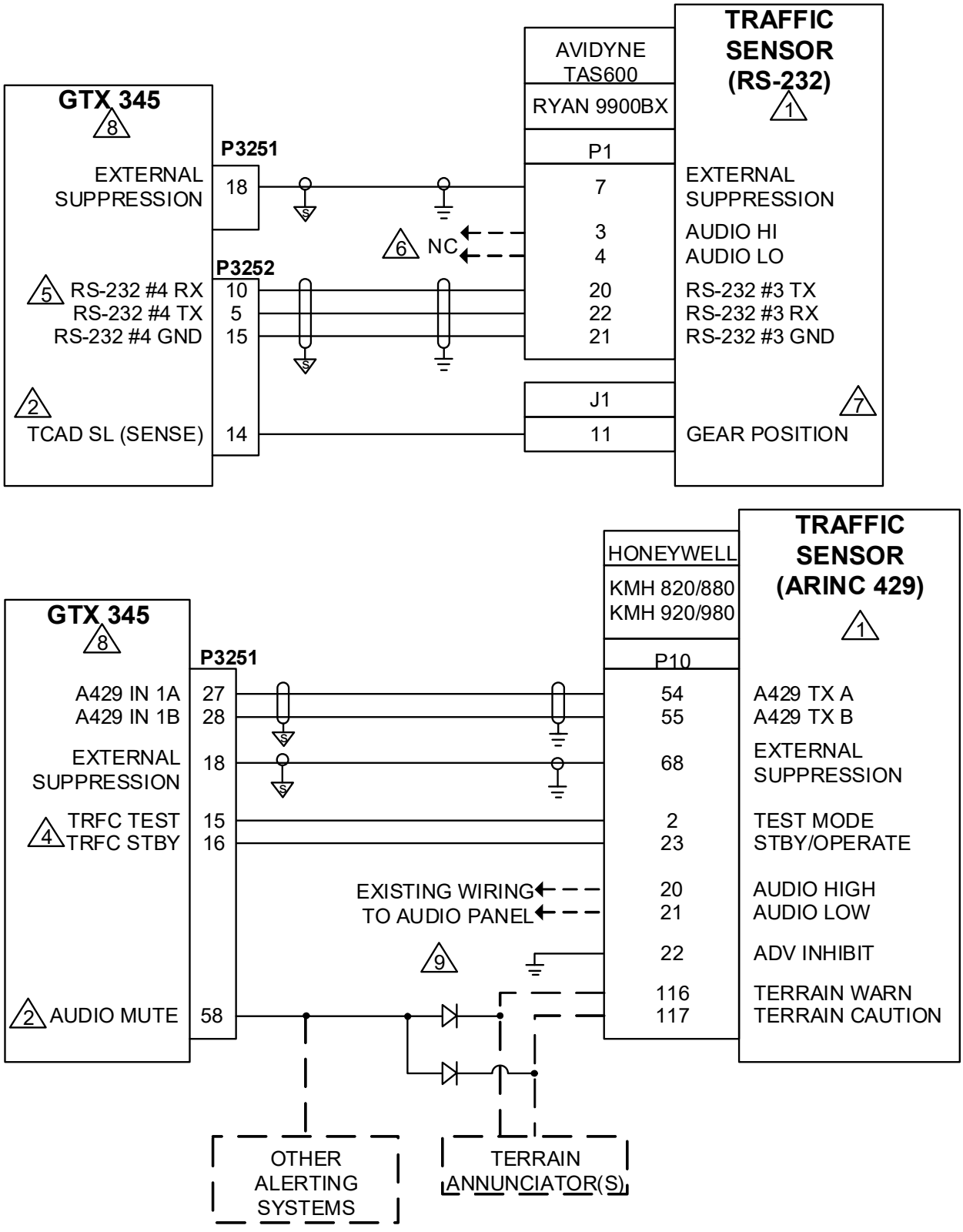

Figure B-39 GTX 345 - Traffic System
Sheet 1 of 3

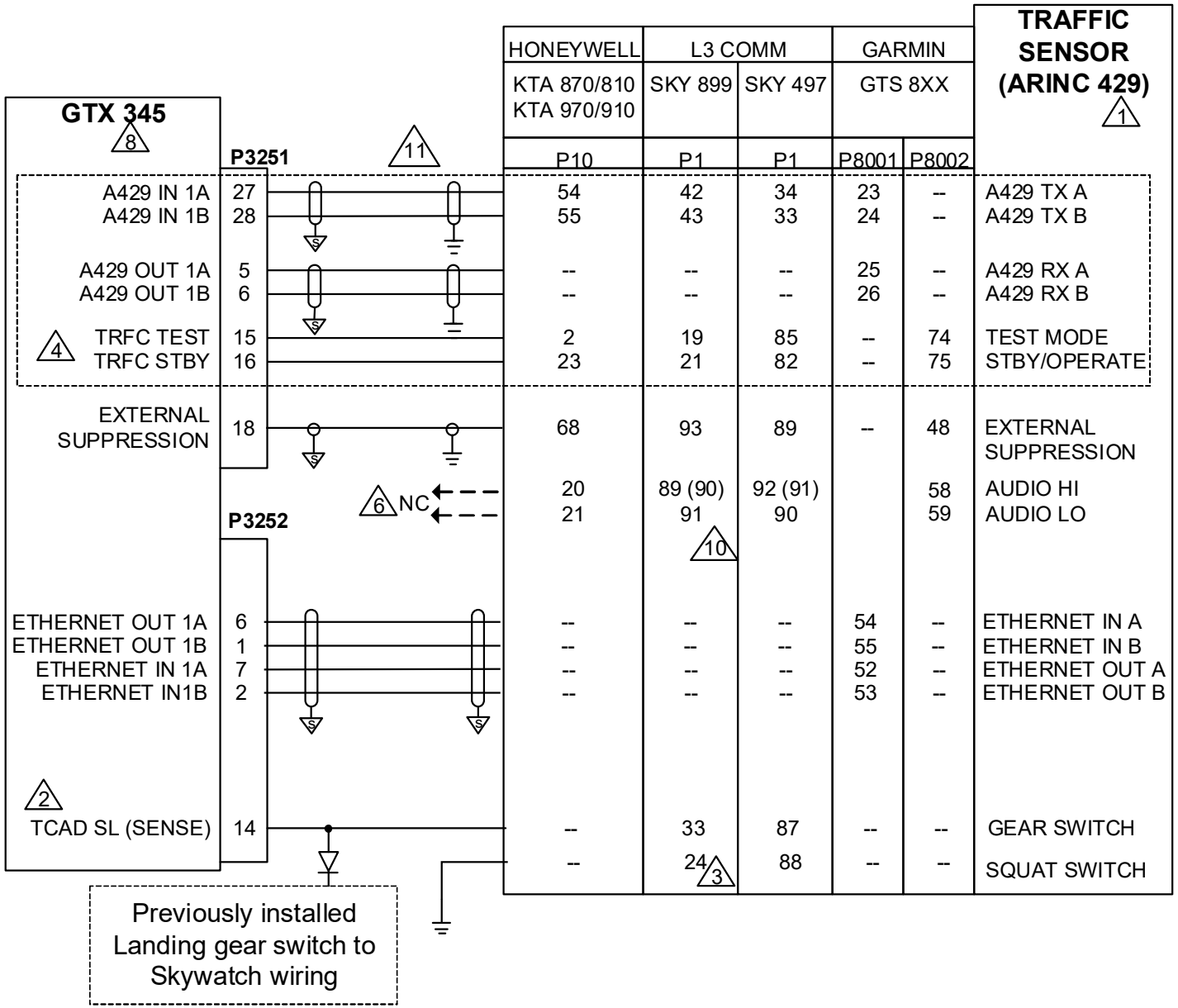

Figure B-39 GTX 345 - Traffic System
Sheet 2 of 3

NOTES

1. ADDITIONAL INTERFACES TO THE EXTERNAL TRAFFIC SYSTEM NOT IDENTIFIED IN THE INTERCONNECT SHOULD REMAIN CONNECTED, SUCH AS ALTITUDE AND HEADING DATA FOR PROPER TAS/TCAS OPERATION. REFER TO SECTION 7 AND APPENDIX C FOR MORE REQUIRED CONFIGURATIONS FOR INTERFACING THE GTX 345R AND AN EXTERNAL TRAFFIC SENSOR IN G950/G1000 EQUIPPED AIRCRAFT.

2. IF THIS DISCRETE IS ALREADY USED, ANY CONFIGURABLE OUTPUT DISCRETE CAN BE USED INSTEAD.

3. CONFIGURE THE TRC 899 “WEIGHT ON WHEELS” SWITCH AS “ACTIVE-LOW.” REFER TO MANUFACTURER’S DOCUMENTATION FOR COMPLETE CONFIGURATION INFORMATION.

4. CONFIGURABLE FOR P3251 ONLY.

5. NON-CONFIGURABLE PORT. ONLY RS-232 PORT 4 CAN BE USED FOR THIS CONNECTION.

6. IF THE EXTERNAL TRAFFIC SENSOR WAS INTERFACED TO THE AUDIO PANEL, THESE WIRES SHOULD BE CAPPED AND STOWED. ONLY THE GTX 345 SHOULD BE INTERFACED TO THE AUDIO PANEL.

7. THIS DISCRETE IS TO DRIVE THE SENSITIVITY LEVEL FOR THE TRAFFIC SYSTEM. FOR G950/G1000 INSTALLATIONS, DO NOT CONNECT TO THE GTX 345 UNLESS THE GTX 345 HAS A RADAR ALTIMETER INPUT.

8. REFER TO THE AUDIO PANEL INTERFACE FOR DETAILS.

9. IF THE KMH HAS THE COMBINED TAS/EGPWS, THE AUDIO WIRING REMAINS CONNECTED. THE TERRAIN ANNUNCIATOR SIGNALS DRIVE THE AUDIO MUTE INPUT TO THE GTX WITH THE APPLICATION OF TWO ADDITIONAL DIODES (P/N: 1N4007). IF OTHER SYSTEMS WERE INTERFACED TO THE ADV INHIBIT (P10-22), THEY SHOULD BE REMOVED FROM P10-22 AND INTERFACED TO THE GTX AS SHOWN. IF THE EGPWS IS NOT ENABLED, THE AUDIO WIRING CAN BE CAPPED AND STOWED AND THE TERRAIN ANNUNCIATOR SIGNALS WITH THE DIODES DO NOT NEED TO BE CONNECTED TO THE GTX AUDIO MUTE.

10. THIS CONNECTION REQUIRES THE SKY 899 LANDING GEAR SWITCH TO BE CONFIGURED FOR ACTIVE-LOW. IF THE SKY 899 LANDING GEAR SWITCH IS CONFIGURED FOR ACTIVE-HIGH, THE GTX 345 TCAD SL DISCRETE CANNOT BE CONNECTED TO THE SKY 899.

11. IF HSDB INTERFACE BETWEEN GTX AND GTS IS CONNECTED, ARINC 429 AND DISCRETE CONNECTIONS ARE NOT REQUIRED.

Figure B-39 GTX 345 - Traffic System
Sheet 3 of 3

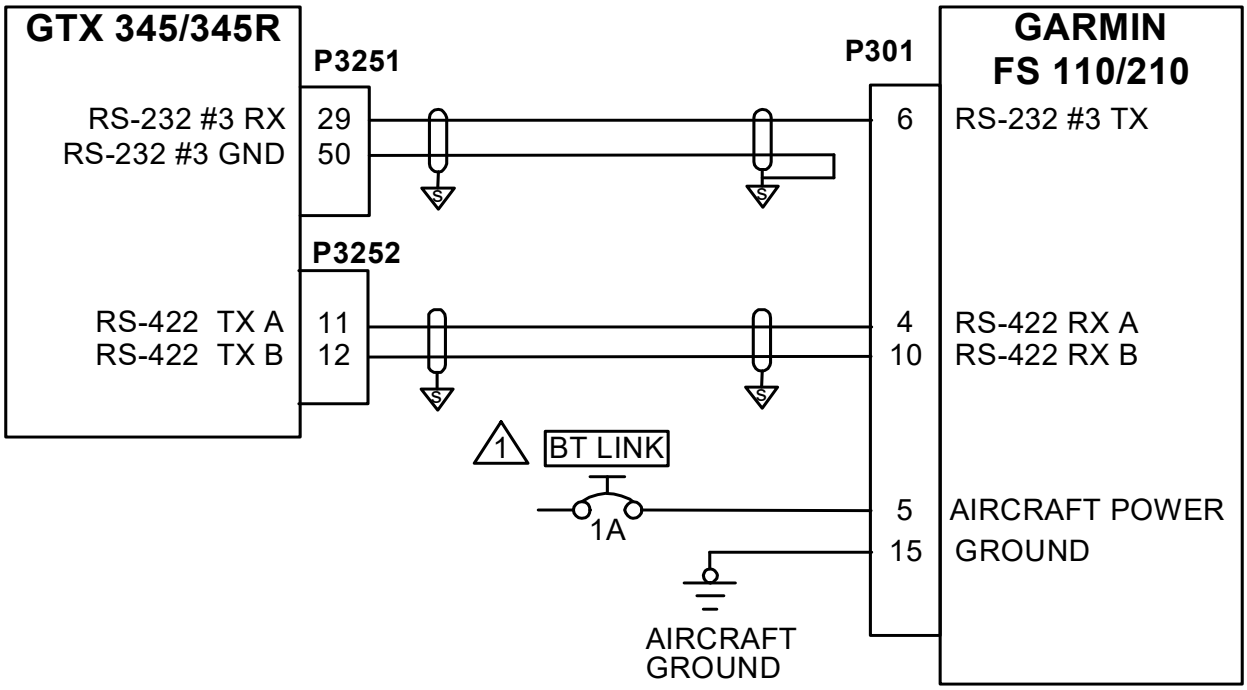

NOTES

1. CIRCUIT BREAKER SHOULD BE LABELED AS SHOWN.

Figure B-40 GTX 345 - Flight Stream

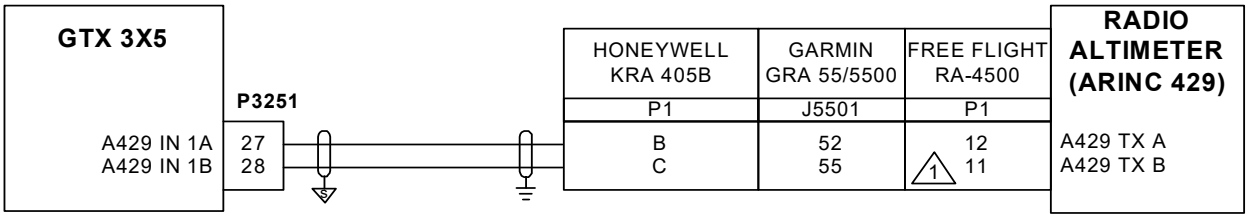

NOTES

1. ONLY APPLICABLE TO FREE FLIGHT RA-4500 (P/N 84560-X2-XXXX).

Figure B-41 GTX 3X5 - Radio Altimeter

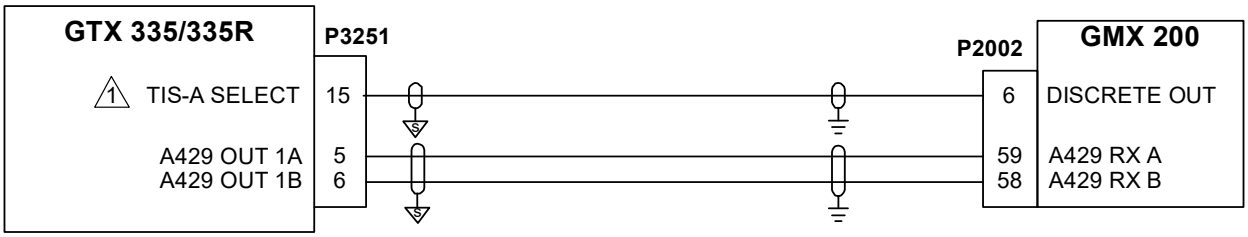

NOTES

1. CONFIGURABLE I/O DISCRETE.

Figure B-42 GTX 335 - GMX 200

NOTES

1. **GMX 200 ONLY:** JUMPER MUST BE INSTALLED AS SHOWN TO CONFIGURE PORT 4 FOR RS-422 OPERATION. IF PORT 4 IS USED AS AN RS-422 PORT, RS-232 PORT 4 CANNOT BE USED.

2. THE GMX 200 DOES NOT DISPLAY CORRELATED TRAFFIC. IF A COMBINED ADS-B IN AND TAS/TCAS SYSTEM IS INSTALLED IN THE AIRCRAFT, AN ADDITIONAL APPROVED DISPLAY MUST PROVIDE THE CORRELATED PICTURE. REFER TO AC 20-172B APPENDIX C.

Figure B-43 GTX 345 - MX20/GMX 200

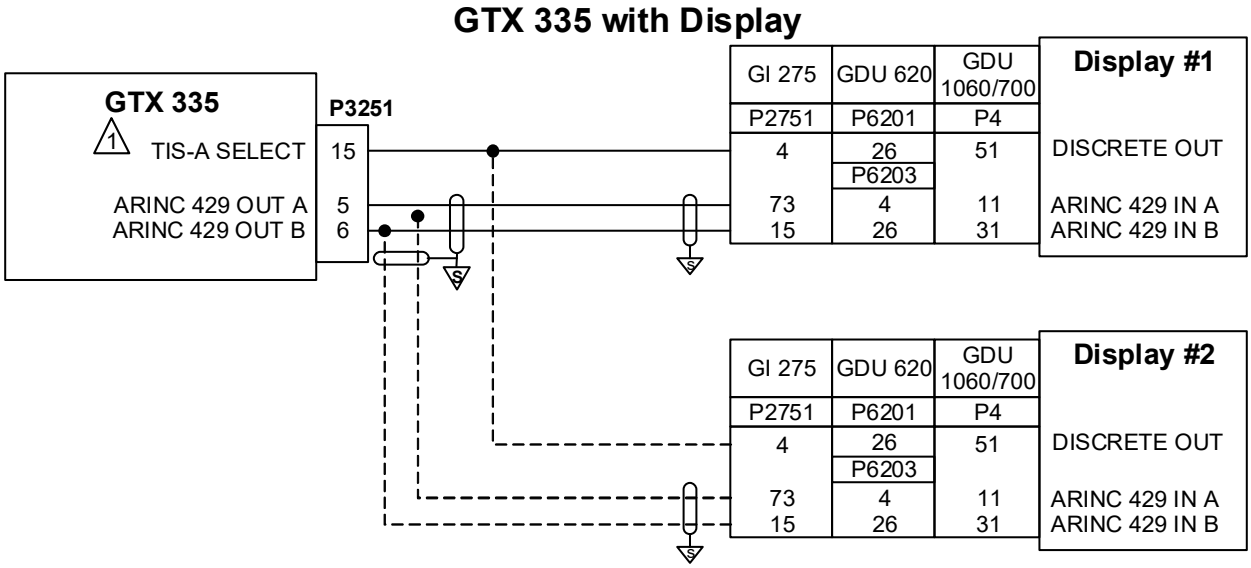

NOTES

1 CONFIGURABLE I/O DISCRETE.

Figure B-44 GTX 335 - TIS-A Display

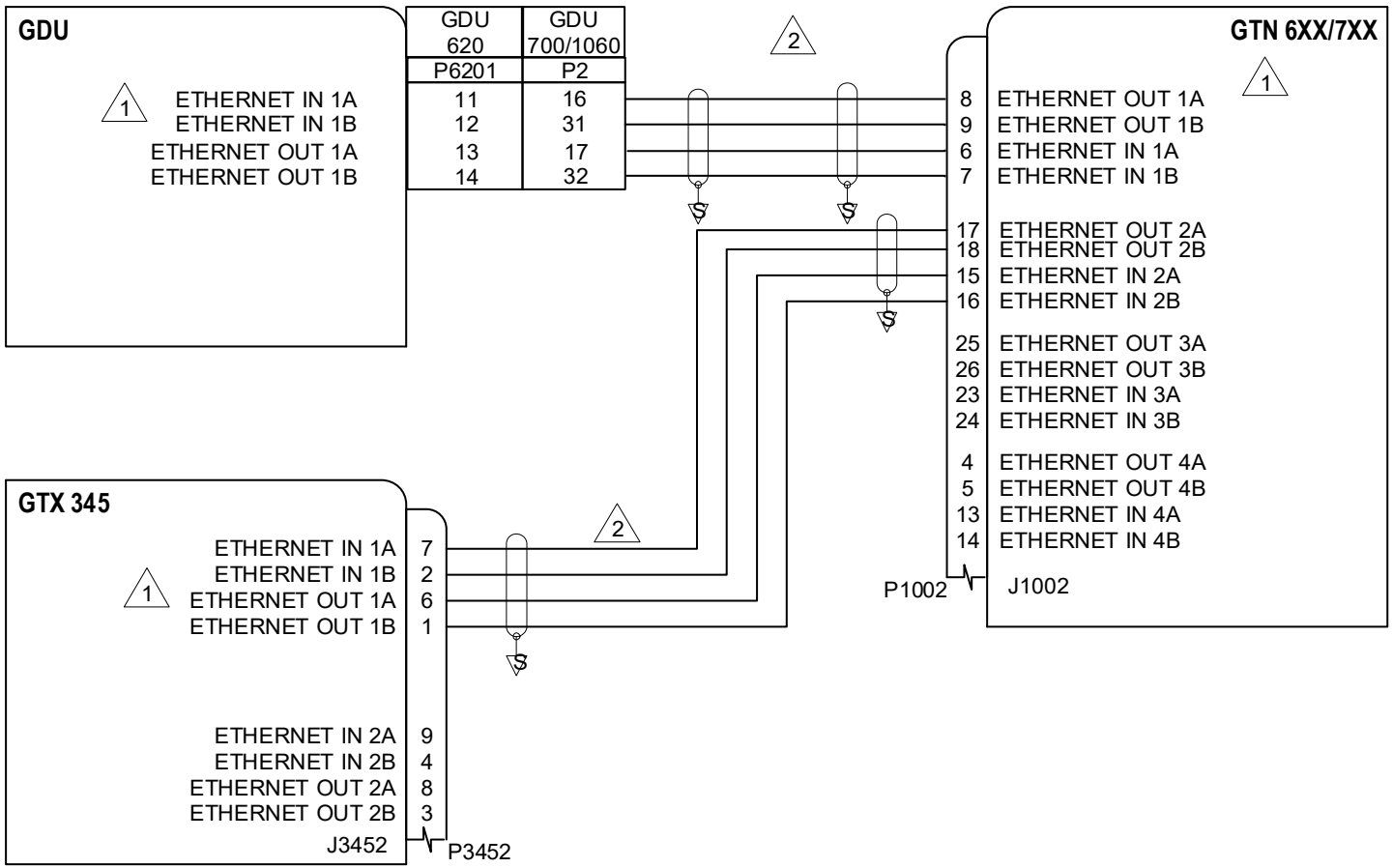

NOTES

1. ANY AVAILABLE HSDB PORT IS ACCEPTABLE.

2. USE AIRCRAFT GRADE CATEGORY 5 ETHERNET CABLE.

Figure B-45 GTX 345 - GDU

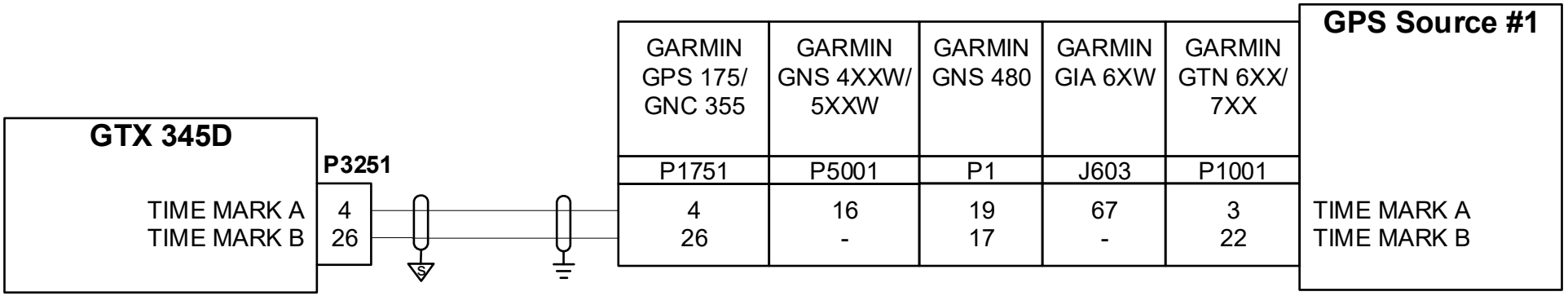

NOTES

1. REFER TO THE GENERAL NOTES IDENTIFIED AT THE START OF THIS APPENDIX FOR MORE INFORMATION AND REQUIREMENTS.

Figure B-46 GTX 345D - Time Mark

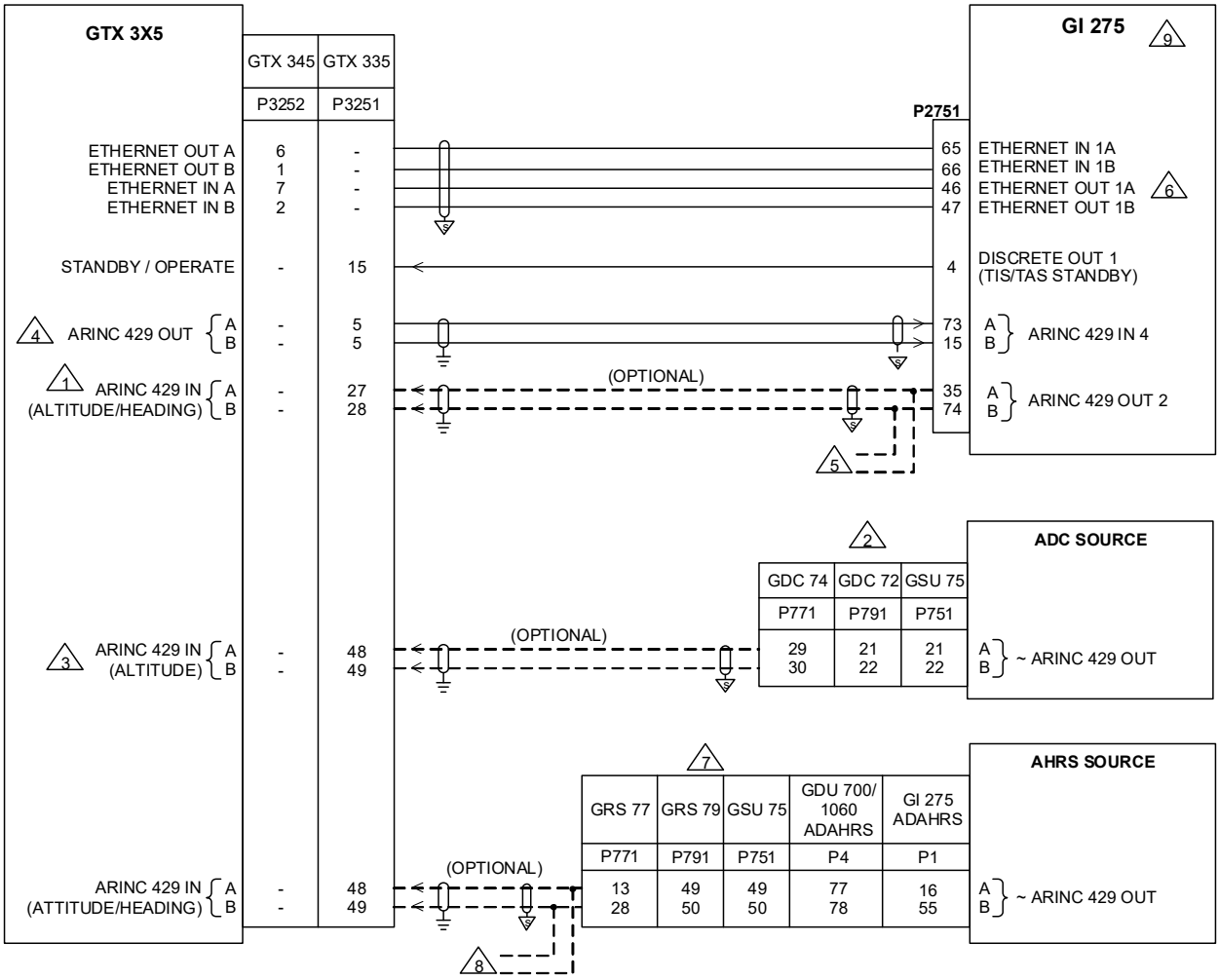

Figure B-47 GTX 3X5 - GI 275
Sheet 1 of 2

NOTES

1. IF DESIRED, ALTITUDE, TEMPERATURE, HEADING, SPEED, AND SELECTED COURSE INFORMATION MAY BE PROVIDED BY THE GI 275 TO THE TRANSPONDER

2. USE ONLY ADC OUTPUT OF THE GSU 75.

3. IF THE GI 275 IS THE ONLY ALTITUDE SOURCE FOR THE GTX, IT IS RECOMMENDED THAT THE GTX ALSO BE CONNECTED DIRECTLY TO AN EXTERNAL AIR DATA SOURCE SO THAT THE TRANSPONDER WILL CONTINUE REPORTING ALTITUDE IN THE EVENT OF A GI 275 FAILURE.

4. IF ANOTHER TRAFFIC SOURCE IS WIRED TO THE GI 275, DO NOT WIRE THE GTX ARINC OUTPUT TO THE GI 275.

5. SPLICE WITH GPS NAVIGATOR ARINC OUTPUT (IF INSTALLED) IS ALLOWED

6. REFER TO GI 275 PART 23 AML STC INSTALLATION MANUAL FOR HSDB ARCHITECTURE.

7. USE ONLY AHRS OR ADAHRS OUTPUT OF THE GSU 75.

8. SPLICE WITH WEATHER RADAR STABILIZATION OUTPUT (IF INSTALLED) IS ALLOWED.

9. ANY AVAILABLE GI 275 DISCRETE, HSDB, AND/OR ARINC 429 PORTS MAY BE USED.

10. REFER TO GENERAL NOTES FOR MORE INFORMATION AND REQUIREMENTS.

Figure B-47 GTX 3X5 - GI 275
Sheet 2 of 2

G950/G1000

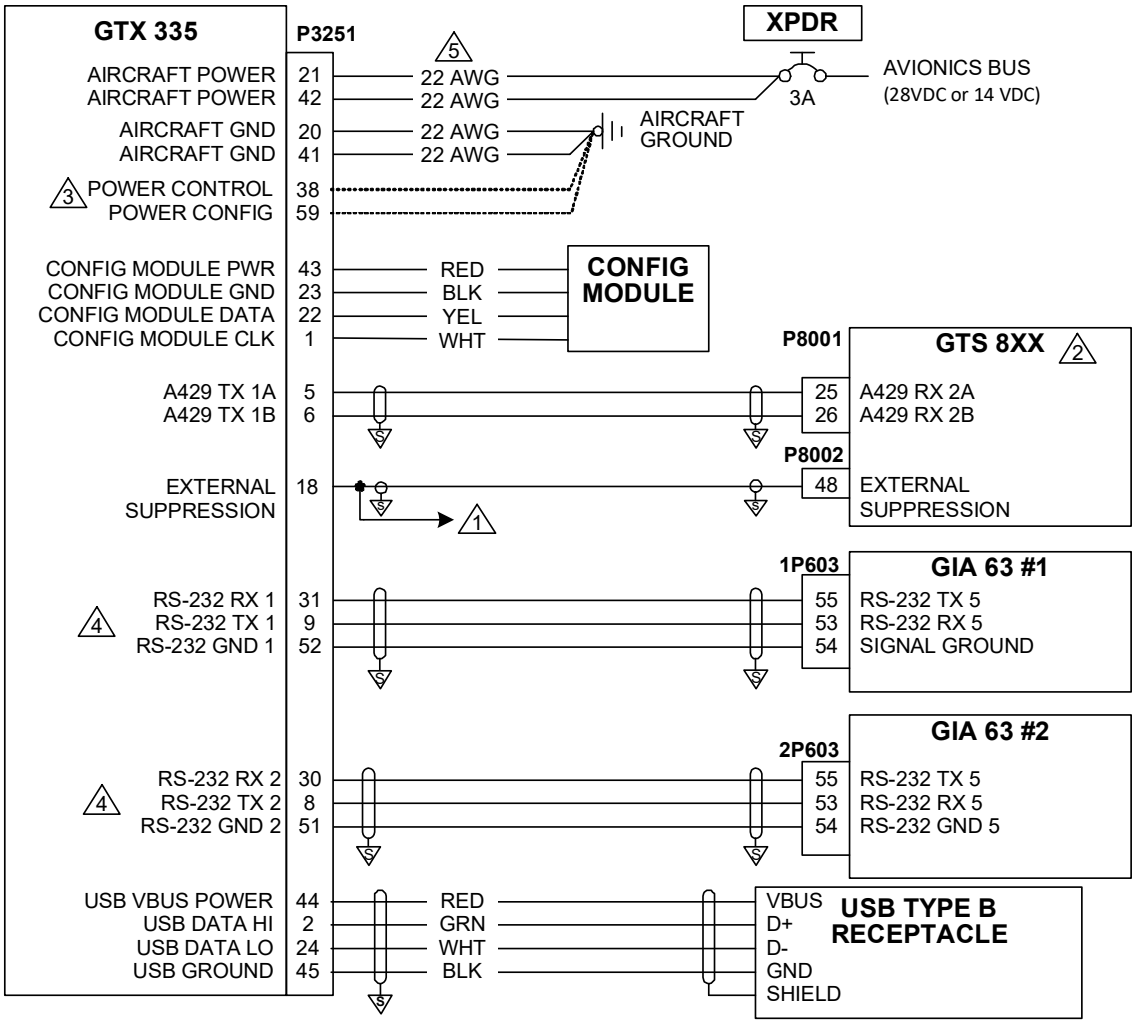

NOTES

1. CONNECTION TO AIRCRAFT SUPPRESSION BUS. I/O PULSES MAY NOT BE COMPATIBLE WITH ALL MODELS OF DME. KNOWN INCOMPATIBLE UNITS INCLUDE THE BENDIX/KING KN 62, KN 64, AND KNS 80. THESE MODELS HAVE AN OUTPUT-ONLY SUPPRESSION AND MAY DAMAGE THE GTX MUTUAL SUPPRESSION OUTPUT. IN THIS CASE, LEAVE THE SUPPRESSION PIN OPEN.

2. GTS 8XX IS THE ONLY SUPPORTED TRAFFIC SYSTEM THAT INTERFACES WITH THE GTX 335.

3. REFER TO SECTION 10.2.4 FOR MORE INFORMATION.

4. RS-232 PORTS 1 THROUGH 3 CAN BE USED.

5. SINGLE 22 AWG WIRE WITH 3A CIRCUIT BREAKER IS ALLOWED WITH WIRE RUNS LESS THAN 20.0 FEET. SINGLE 20 AWG WIRE WITH 5A CIRCUIT BREAKER IS ALLOWED WITH WIRE RUNS GREATER THAN 20.0 FEET.

Figure B-48 GTX 335 - G950/G1000 (Typical)

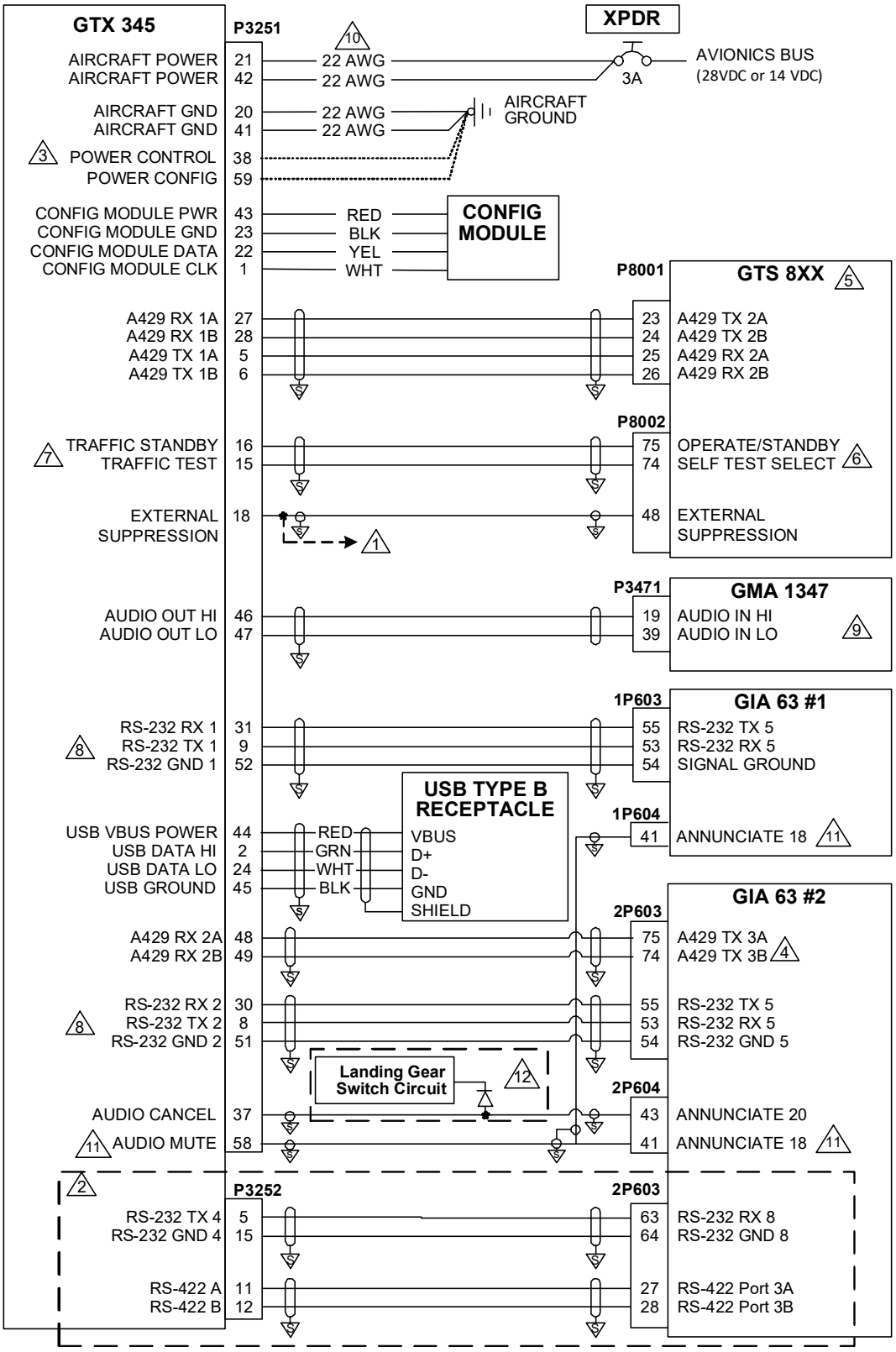

Figure B-49 GTX 345 - G950/G1000 (Typical)
Sheet 1 of 2

NOTES

1. CONNECTION TO AIRCRAFT SUPPRESSION BUS. I/O PULSES MAY NOT BE COMPATIBLE WITH ALL MODELS OF DME. THE BENDIX/KING KN 62, KN 64, AND KNS 80 HAVE AN OUTPUT-ONLY SUPPRESSION AND MAY DAMAGE THE GTX MUTUAL SUPPRESSION OUTPUT. DO NOT CONNECT THE GTX MUTUAL SUPPRESSION PIN.

2. GDL 90 EMULATION - RS-422 FIS-B CONNECTION AND RS-232 ADS-B IN TRAFFIC.

3. REFER TO SECTION 10.2.4 FOR MORE INFORMATION.

4. PROVIDES TRUE HEADING TO UNIT, REQUIRED FOR DISPLAY OF TRAFFIC. ANY AVAILABLE ARINC 429 PORT IS ALLOWED. THIS MUST BE CONFIGURED BY THE INSTALLER.

5. GTS 8XX SHOWN AS AN EXAMPLE. REFER TO EXTERNAL TRAFFIC SENSORS FOR ALTERNATE EXTERNAL TRAFFIC SYSTEM OPTIONS. ADDITIONAL EXTERNAL TRAFFIC CONFIGURATION IS REQUIRED. IF AN EXISTING TAS/TCAS UNIT WITHOUT AN INTERNAL EGPWS (E.G., GTS, KTA, SKY, RYAN) IS INTERFACED TO THE GTX FOR CORRELATED TRAFFIC, THE EXISTING AUDIO WIRES FROM THE EXTERNAL TRAFFIC SENSOR MUST BE CAPPED AND STOWED SINCE THE GTX DRIVES THE AUDIO MESSAGES. REFER TO THE TRAFFIC SYSTEM INTERCONNECT FOR ADDITIONAL DETAILS.

6. GTX 345R PROVIDES AUTOMATIC CONTROL OF OPERATE/STANDBY BASED ON AIRBORNE STATUS. GTX 3X5 INSTALL TOOL PROVIDES TRAFFIC SELF-TEST DISCRETE FOR EXTERNAL TRAFFIC VALIDATION.

7. CONFIGURABLE I/O DISCRETE. USE PINS ON P3251 ONLY.

8. RS-232 PORTS 1 THROUGH 3 CAN BE USED.

9. ANY UNSWITCHED AND UNMUTED AUDIO INPUT CAN BE USED.

10. SINGLE 22 AWG WIRE WITH 3A CIRCUIT BREAKER IS ALLOWED WITH WIRE RUNS LESS THAN 20.0 FEET. SINGLE 20 AWG WIRE WITH 5A CIRCUIT BREAKER IS ALLOWED WITH WIRE RUNS GREATER THAN 20.0 FEET.

11. CONNECT THE GTX AUDIO MUTE TO THE GIA TA INHIBIT 1 IF HIGHER PRIORITY SYSTEMS ARE ENABLED (E.G., TAWS). TYPICALLY ANNUN*5, ANNUN*15, OR ANNUN*18 ARE ALREADY CONFIGURED.

12. APPLICABLE FOR GDU SW VERSIONS PRIOR TO v9.10 INSTALLED IN AIRCRAFT WITH RETRACTABLE LANDING GEAR. THE AUDIO CANEL DISCRETE AT THE GTX IS AN ACTIVE-LOW INPUT AND MUST BE CONNECTED TO THE LANDING GEAR SWITCH IN SUCH A WAY AS TO PROVIDE A GROUND WHEN THE LANDING GEAR IS IN THE DOWN POSITION.

Figure B-49 GTX 345 - G950/G1000 (Typical)
Sheet 2 of 2

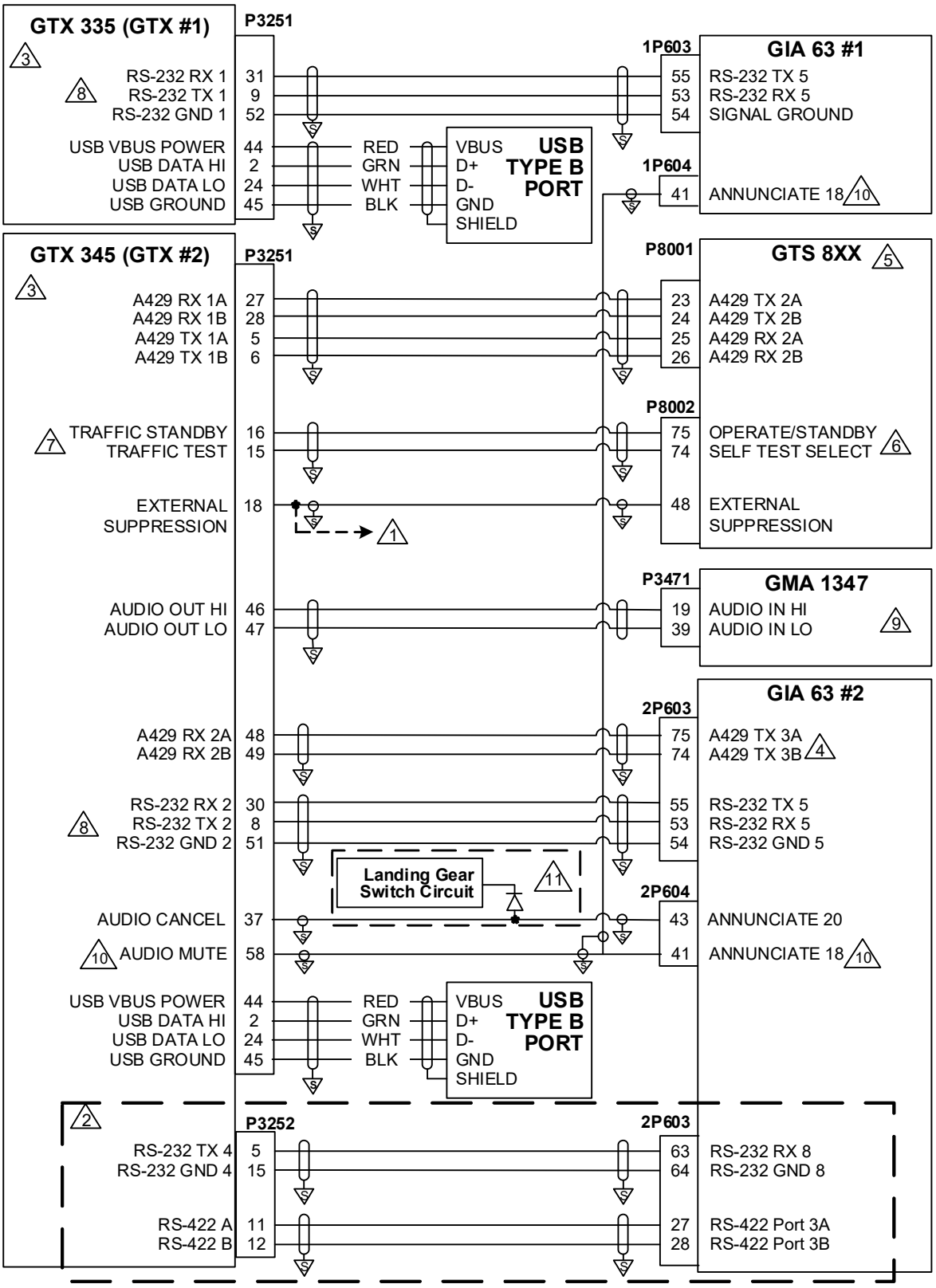

Figure B-50 GTX 3X5 - G950/G1000 (Dual GTX)
Sheet 1 of 2

NOTES

1. CONNECTION TO AIRCRAFT SUPPRESSION BUS. I/O PULSES MAY NOT BE COMPATIBLE WITH ALL MODELS OF DME. THE BENDIX/KING KN 62, KN 64, AND KNS 80 HAVE AN OUTPUT-ONLY SUPPRESSION AND MAY DAMAGE THE GTX MUTUAL SUPPRESSION OUTPUT. DO NOT CONNECT THE GTX MUTUAL SUPPRESSION PIN.

2. GDL 90 EMULATION - RS-422 FIS-B CONNECTION AND RS-232 ADS-B IN TRAFFIC.

3. REFER TO FIGURE B-12 FOR REQUIRED POWER, GROUND, AND CONFIGURATION MODULE CONNECTIONS.

4. PROVIDES TRUE HEADING TO UNIT. REQUIRED FOR DISPLAY OF TRAFFIC. ANY AVAILABLE ARINC 429 PORT IS ALLOWED. THIS MUST BE CONFIGURED BY THE INSTALLER.

5. GTS 8XX SHOWN AS AN EXAMPLE. REFER TO EXTERNAL TRAFFIC SENSORS FOR ALTERNATE EXTERNAL TRAFFIC SYSTEM OPTIONS. ADDITIONAL EXTERNAL TRAFFIC CONFIGURATION IS REQUIRED. IF AN EXISTING TAS/TCAS UNIT WITHOUT AN INTERNAL EGPWS (E.G., GTS, KTA, SKY, RYAN) IS INTERFACED TO THE GTX FOR CORRELATED TRAFFIC, THE EXISTING AUDIO WIRES FROM THE EXTERNAL TRAFFIC SENSOR MUST BE CAPPED AND STOWED SINCE THE GTX DRIVES THE AUDIO MESSAGES. REFER TO THE TRAFFIC SYSTEM INTERCONNECT FOR ADDITIONAL DETAILS.

6. GTX 345R PROVIDES AUTOMATIC CONTROL OF OPERATE/STANDBY BASED ON AIRBORNE STATUS. GTX 3X5 INSTALL TOOL PROVIDES TRAFFIC SELF-TEST DISCRETE FOR EXTERNAL TRAFFIC VALIDATION.

7. CONFIGURABLE I/O DISCRETE. USE PINS ON P3251 ONLY.

8. RS-232 PORTS 1 THROUGH 3 CAN BE USED.

9. ANY UNSWITCHED AND UNMUTED AUDIO INPUT CAN BE USED.

10. CONNECT THE GTX AUDIO MUTE TO THE GIA TA INHIBIT 1 IF HIGHER PRIORITY SYSTEMS ARE ENABLED (E.G., TAWS). TYPICALLY ANNUN*5, ANNUN*15, OR ANNUN*18 ARE ALREADY CONFIGURED.

11. APPLICABLE FOR GDU SW VERSIONS PRIOR TO v9.10 INSTALLED IN AIRCRAFT WITH RETRACTABLE LANDING GEAR. THE AUDIO CANCEL DISCRETE AT THE GTX IS AN ACTIVE-LOW INPUT AND MUST BE CONNECTED TO THE LANDING GEAR SWITCH IN SUCH A WAY AS TO PROVIDE A GROUND WHEN THE LANDING GEAR IS IN THE DOWN POSITION.

Figure B-50 GTX 3X5 - G950/G1000 (Dual GTX)
Sheet 2 of 2

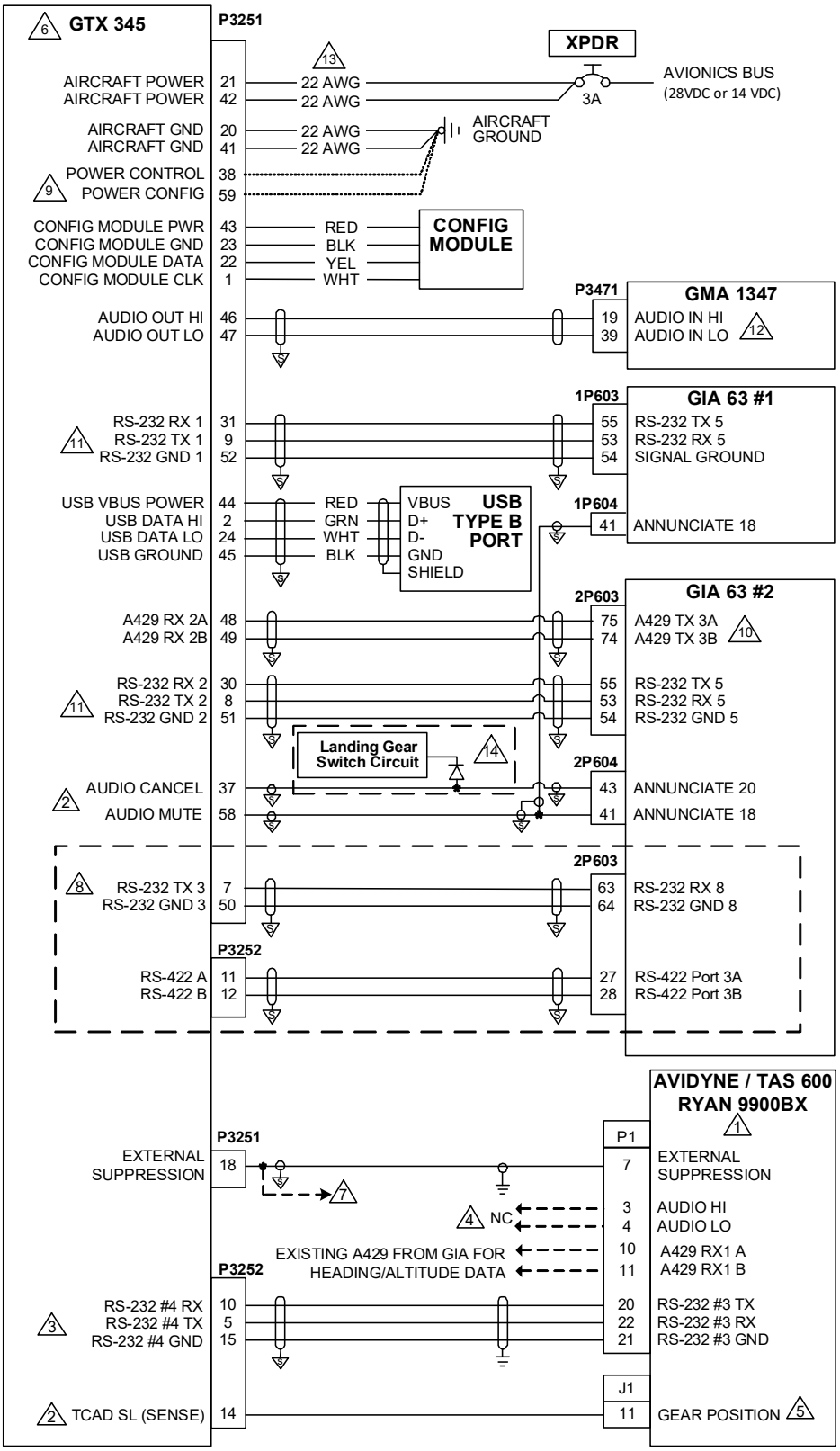

Figure B-51 GTX 345 - G1000 with TAS 6XX
Sheet 1 of 2

NOTES

1. ADDITIONAL INTERFACES TO THE EXTERNAL TRAFFIC SYSTEM NOT IDENTIFIED IN THE INTERCONNECT SHOULD REMAIN CONNECTED, SUCH AS ALTITUDE AND HEADING DATA FOR PROPER TAS/TCAS OPERATION. REFER TO SECTION 6 AND APPENDIX C FOR MORE REQUIRED CONFIGURATIONS FOR INTERFACING THE GTX 345R AND AN EXTERNAL TRAFFIC SENSOR IN G950/G1000 EQUIPPED AIRCRAFT.

2. CONFIGURABLE I/O DISCRETE, ANY AVAILABLE DISCRETE CAN BE USED.

3. NON-CONFIGURABLE PORT. ONLY RS-232 PORT 4 CAN BE USED FOR THIS CONNECTION.

4. IF THE EXTERNAL TRAFFIC SENSOR WAS PREVIOUSLY INTERFACED TO THE AUDIO PANEL, THESE WIRES MUST BE CAPPED AND STOWED. ONLY THE GTX 345R CAN BE INTERFACED TO THE AUDIO PANEL.

5. THIS DISCRETE IS TO DRIVE THE SENSITIVITY LEVEL FOR THE TRAFFIC SYSTEM. FOR G950/G1000 INSTALLATIONS, DO NOT CONNECT TO THE GTX 345 UNLESS THE GTX 345 HAS A RADAR ALTIMETER INPUT.

6. REFER TO THE AUDIO PANEL INTERFACE FOR DETAILS.

7. CONNECTION TO AIRCRAFT SUPPRESSION BUS. I/O PULSES MAY NOT BE COMPATIBLE WITH ALL MODELS OF DME. THE BENDIX/KING KN 62, KN 64, AND KNS 80 HAVE AN OUTPUT-ONLY SUPPRESSION AND MAY DAMAGE THE GTX MUTUAL SUPPRESSION OUTPUT. DO NOT CONNECT THE GTX MUTUAL SUPPRESSION PIN.

8. GDL 90 EMULATION - RS-422 FIS-B CONNECTION AND RS-232 ADS-B IN TRAFFIC.

9. REFER TO SECTION 10.2.4 FOR MORE INFORMATION.

10. PROVIDES TRUE HEADING TO UNIT; REQUIRED FOR DISPLAY OF TRAFFIC. ANY AVAILABLE ARINC 429 PORT IS ALLOWED. THIS MUST BE CONFIGURED BY THE INSTALLER.

11. RS-232 PORTS 1 THROUGH 3 CAN BE USED.

12. ANY UNSWITCHED AND UNMUTED AUDIO INPUT CAN BE USED.

13. SINGLE 22 AWG WIRE WITH 3A CIRCUIT BREAKER IS ALLOWED WITH WIRE RUNS LESS THAN 20 FEET. SINGLE 20 AWG WIRE WITH 5A CIRCUIT BREAKER IS ALLOWED WITH WIRE RUNS GREATER THAN 20 FEET.

14. APPLICABLE FOR GDU SW VERSIONS PRIOR TO v9.10 INSTALLED IN AIRCRAFT WITH RETRACTABLE LANDING GEAR. THE AUDIO CANCEL DISCRETE AT THE GTX IS AN ACTIVE-LOW INPUT AND MUST BE CONNECTED TO THE LANDING GEAR SWITCH IN SUCH A WAY AS TO PROVIDE A GROUND WHEN THE LANDING GEAR IS IN THE DOWN POSITION.

Figure B-51 GTX 345 - G1000 with TAS 6XX
Sheet 2 of 2

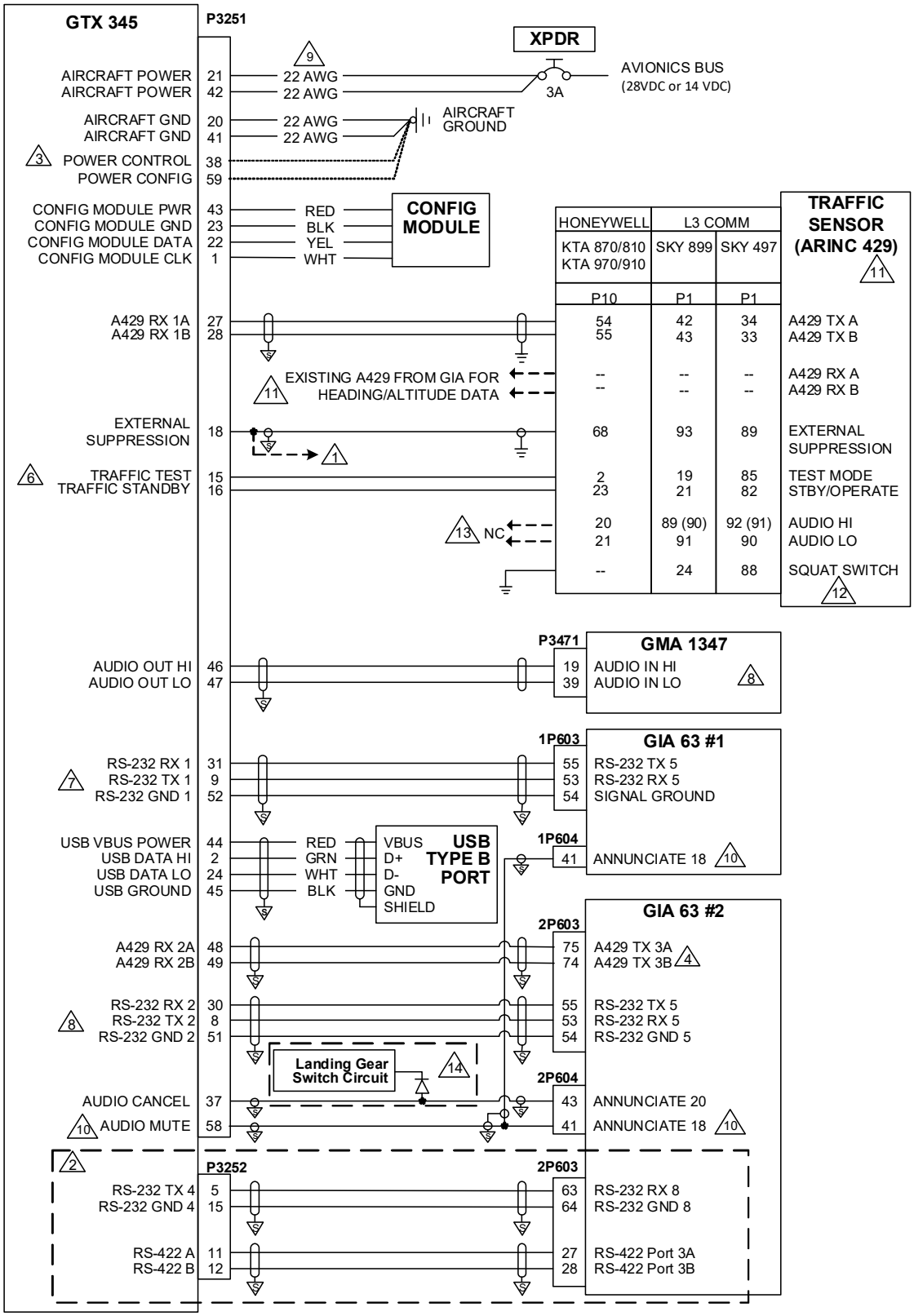

Figure B-52 GTX 345 - G1000 with External Traffic
Sheet 1 of 2

NOTES

1. CONNECTION TO AIRCRAFT SUPPRESSION BUS. I/O PULSES MAY NOT BE COMPATIBLE WITH ALL MODELS OF DME. THE BENDIX/KING KN 62, KN 64, AND KNS 80 HAVE AN OUTPUT-ONLY SUPPRESSION AND MAY DAMAGE THE GTX MUTUAL SUPPRESSION OUTPUT. DO NOT CONNECT THE GTX MUTUAL SUPPRESSION PIN.

2. GDL 90 EMULATION - RS-422 FIS-B CONNECTION AND RS-232 ADS-B IN TRAFFIC.

3. REFER TO SECTION 8.2.4 FOR MORE INFORMATION.

4. PROVIDES TRUE HEADING TO UNIT; REQUIRED FOR DISPLAY OF TRAFFIC. ANY AVAILABLE ARINC 429 PORT IS ALLOWED. THIS MUST BE CONFIGURED BY THE INSTALLER.

5. IF AN EXISTING TAS/TCAS UNIT WITHOUT AN INTERNAL EGPWS (E.G., GTS, KTA, SKY, RYAN) IS INTERFACED TO THE GTX FOR CORRELATED TRAFFIC, THE EXISTING AUDIO WIRES FROM THE EXTERNAL TRAFFIC SENSOR MUST BE CAPPED AND STOWED SINCE THE GTX DRIVES THE AUDIO MESSAGES. REFER TO THE TRAFFIC SYSTEM INTERCONNECT FOR ADDITIONAL DETAILS

6. CONFIGURABLE I/O DISCRETE. USE PINS ON P3251 ONLY.

7. RS-232 PORTS 1 THROUGH 3 CAN BE USED.

8. ANY UNSWITCHED AND UNMUTED AUDIO INPUT CAN BE USED.

9. SINGLE 22 AWG WIRE WITH 3A CIRCUIT BREAKER IS ALLOWED WITH WIRE RUNS LESS THAN 20 FEET. SINGLE 20 AWG WIRE WITH 5A CIRCUIT BREAKER IS ALLOWED WITH WIRE RUNS GREATER THAN 20 FEET.

10. CONNECT THE GTX AUDIO MUTE TO THE GIA TA INHIBIT 1 IF HIGHER PRIORITY SYSTEMS ARE ENABLED (E.G., TAWS). TYPICALLY ANNUN*5, ANNUN*15, OR ANNUN*18 ARE ALREADY CONFIGURED.

11. ADDITIONAL INTERFACES TO THE EXTERNAL TRAFFIC SYSTEM NOT IDENTIFIED IN THE INTERCONNECT SHOULD REMAIN CONNECTED, SUCH AS ALTITUDE AND HEADING DATA FOR PROPER TAS/TCAS OPERATION. REFER TO SECTION 7 AND APPENDIX C FOR MORE REQUIRED CONFIGURATIONS FOR INTERFACING THE GTX 345R AND AN EXTERNAL TRAFFIC SENSOR IN G950/G1000 EQUIPPED AIRCRAFT.

12. CONFIGURE THE TRC 899 “WEIGHT ON WHEELS” SWITCH AS “ACTIVE-LOW.” REFER TO MANUFACTURER’S DOCUMENTATION FOR COMPLETE CONFIGURATION INFORMATION.

13. IF THE EXTERNAL TRAFFIC SENSOR WAS INTERFACED TO THE AUDIO PANEL, THESE WIRES SHOULD BE CAPPED AND STOWED. ONLY THE GTX 345 SHOULD BE INTERFACED TO THE AUDIO PANEL.

14. APPLICABLE FOR GDU SW VERSIONS PRIOR TO v9.10 INSTALLED IN AIRCRAFT WITH RETRACTABLE LANDING GEAR. THE AUDIO CANCEL DISCRETE AT THE GTX IS AN ACTIVE-LOW INPUT AND MUST BE CONNECTED TO THE LANDING GEAR SWITCH IN SUCH A WAY AS TO PROVIDE A GROUND WHEN THE LANDING GEAR IS IN THE DOWN POSITION.

Figure B-52 GTX 345 - G1000 with External Traffic
Sheet 2 of 2

APPENDIX C EQUIPMENT COMPATIBILITY AND CONFIGURATION

C.1 Remote Control C-3
C.2 GPS Source C-5
C.3 Altitude Source C-7
C.4 Radar Altimeters C-10
C.5 Heading Source C-11
C.6 Audio Panels C-13
C.7 ADS-B Traffic and Weather Display C-14
C.8 TIS-A Traffic Display C-16
C.9 Traffic Sensors C-17
C.10 Bluetooth C-18
C.11 UAT Out Control C-18

Equipment listed is compatible with the GTX 33/330 and GTX 3X5 series ADS-B transponders. Hardware not applicable to the GTX 33/330 or GTX 3X5 is marked with "N/A" in the Configuration Setting.

Garmin LRU Interface Summary

Table C-1 Compatible LRUs

GTX Unit	Interfaced LRU	Min. Software Needed	Primary Functions
GTX 3X5	GTN 6XX/7XX	v6.11	• Transponder control • Traffic and weather display • ADS-B GPS position
	GPS 175/GNC 355	v2.02	• ADS-B GPS Position • ADS-B traffic and weather display from GTX 345
	GNS 400W/500W	v5.30	• Traffic and weather display • ADS-B GPS position
	GNS 480	v2.4	• Transponder control • TIS-A display • ADS-B GPS position
	G950/G1000	Varies (refer to Equipment List)	• Transponder control • Traffic and weather display • ADS-B GPS position
	GTX 3X5 with GPS	Main: v2.02 ADS-B: v2.01	• ADS-B GPS position • Altitude source
	GDL 69 SXM	v5.10	• HSDB pass through for GTX 345
	Flight Stream 110/210	v2.40	• Bluetooth access to PED (displays traffic and weather)
	GDU 620	v7.12	• ADS-B traffic and weather display from GTX 345 • TIS-A traffic display from GTX 335 • Altitude/Airdata source
	GDU 700/1060	v2.01	• ADS-B traffic and weather display from GTX 345 • TIS-A traffic display from GTX 335 • Altitude/Airdata source
	GI 275	v2.02	• ADS-B traffic and weather display from GTX 345 • TIS-A traffic display from GTX 335 • Serial Altitude • Transponder control for GTX 345 (v2.30 or later)
	GMX 200	v2.14	• ADS-B traffic and weather display from GTX 345 • TIS-A traffic display from GTX 335
	MX20	v5.7	• ADS-B traffic and weather display from GTX 345
GTX 33/330	GTN 6XX/7XX	v3.01	• Transponder control • ADS-B GPS position
	GPS 175/GNC 355	v2.02	• ADS-B GPS position
	GNS 400W/500W	v5.03	• TIS-A display • ADS-B GPS position
	GNS 480	v2.4	• Transponder control • TIS-A display • ADS-B GPS position
	G950/G1000	N/A	• Not supported by this STC
	GDL 88 with GPS	v3.20	• ADS-B GPS position to GTX 330 / 330D
	GDU 620	v7.12	• TIS-A display • Altitude/Airdata source
	GDU 700/1060	v2.01	• TIS-A display • Altitude/Airdata source
	GI 275	v2.02	• TIS-A display • Serial Altitude
	GTX 3X5 with GPS	Main: v2.02 ADS-B: v2.01	• ADS-B GPS position • Altitude source
	GMX 200	v2.14	• TIS-A traffic display

C.1 Remote Control

Table C-2 Remote Control

Manufacturer	Model	Data Format	Interface Config	GTX 33/330 Config	GTX 335 Config	GTX 345 Config	Notes
Garmin	GTN 6XX/7XX	RS-232	GTX Mode S+	REMOTE	REMOTE FMT 1	REMOTE FMT 1	Installations with no TIS
			GTX w/TIS+	REMOTE + TIS	REMOTE FMT 2	N/A	Installations with TIS
	GNS 480	RS-232	GTX +	REMOTE	REMOTE FMT 1	REMOTE FMT 1	Installations with no TIS
			GTX w/TIS+	REMOTE + TIS	REMOTE FMT 2	N/A	Installations with TIS
	G950/G1000	RS-232	GTX 33 [1] **or** GTX 33ES [2]	N/A	REMOTE FMT 1 [3] **or** LGCY REMOTE 1 [4]	REMOTE FMT 1 [3] **or** LGCY REMOTE 1 [4]	
			GTX 33 w/TIS [1] **or** GTX 33ES w/TIS [2]	N/A	REMOTE FMT 2 [3] **or** LGCY REMOTE 2 [4]	N/A	
	GI 275	HSDB	Transponder 1/2: GTX 345	N/A	N/A	SFD: Present	GTX 345 only. [6]
Gables Engineering [5]	7534-1005 **or** 7534-1006	ARINC 429	N/A	N/A	Input: Speed = Low Format: Transponder Control Format 1 Output: Speed = Low Format = Format 7	Input: Speed = Low Format: Transponder Control Format 1 Output: Speed = Low Format = Format 7	Requires installation of an ADSB fail annunciator
	7614 (Collins)	ARINC 429	N/A	N/A	Input: Speed = Low Format: Transponder Control Format 1 Output: Speed = Low Format = Format 1		
	7614 (Honeywell Config 1)	ARINC 429	N/A	N/A	Input: Speed = Low Format: Transponder Control Format 1 Output: Speed = Low Format = Format 1		

Manufacturer	Model	Data Format	Interface Config	GTX 33/330 Config	GTX 335 Config	GTX 345 Config	Notes
Gables Engineering [5]	7614 (Honeywell Config 2)	ARINC 429	N/A	N/A	Input: Speed = Low Format: Transponder Control Format 1		This configuration allows traffic output to an approved display via ARINC 429. Altitude and fault code display is not available with this configuration.
Rockwell Collins [5]	CTL-92E	RS-232 / RS-422 / ARINC 429	N/A	N/A	**RS-232 / RS-422** Format: Transponder Control Format 4 **ARINC 429** Input: Speed = Low Format: Transponder Control Format 1		
	CTL-92	RS-232 / RS-422	N/A	N/A	**RS-232 / RS-422** Format: Transponder Control Format 4		

Notes:

[1] GDU software prior to v9.10.

[2] GDU software v9.10 or later.

[3] GDU software v15.00 or later.

[4] GDU software prior to v15.00.

[5] Requires a Transponder Control Field Enablement. Enablement code must be purchased from a Garmin Dealer. For additional information, refer to *GTX 3X5 Transponder Control Enablement Guide* (P/N 190-01499-22).

[6] GTX main software v2.60 or later, ADS-B software v3.21 or later, and GI 275 main software v2.30 or later required.

C.2 GPS Source

GTX transponders configured for remote control receive GPS position source data from the remote interface.

Table C-3 GPS Source

Manufacturer	Model	Data Format	Interface Config	GTX 33/330 Config	GTX 3X5 Config	Notes
Garmin	G950/G1000	RS-232	GTX 33ES #1 [1] **or** GTX 33ES #1 w/ TIS [2]	N/A	REMOTE FMT 1 [1] [3] **or** REMOTE FMT 2 [2] [3]	Applicable to installations with GIA software v6.40.1 or later and GDU software v13.00 or later (installations with earlier software versions should utilize internal GPS from the GTX 3X5). Note that the primary purpose of this interface is transponder control; however, this format also includes GPS data. Refer to Table C-2 for more information.
					LGCY REMOTE 1 [1] [4] **or** LGCY REMOTE 2 [2] [4]	
	Internal	N/A	N/A	N/A	Refer to Section 7.2.5 for information.	
	GTN 6XX/7XX	RS-232	GTX Mode S+	Remote	ADS-B + FMT 1	
		HSDB	ADS-B In Source: GTX	N/A	Navigator - Enabled	Applicable to GTX 345 installations only.
	GPS 175/ GNC 355	RS-232	ADS-B+ FMT 1	REMOTE	ADS-B+ FMT 1	
		HSDB	ADS-B SRC: GTX #1, GTX #2	N/A	Navigator - Enabled	Applicable to GTX 345 installations only
	GNS 400W/500W	RS-232	ADSB TFC	N/A	GNS	The primary purpose of this interface is for ADS-B In data; however, this format also includes GPS data with HAT and is the recommended format for all GTX 3X5 models. Refer to Table C-8 for more information.
			ADSB TFC WX	N/A		
	GNS 400W/500W	RS-232	ADS-B OUT +	REMOTE	ADS-B + FMT 1	This format must be used when a GTX 3X5 is Transponder #2 in a dual transponder installation, two-way communication is not desired for a GTX 33X, or for a GTX 33/33D. This format provides GPS data without HAT.
			GDL 88	GNS	N/A	Provides GPS Data with HAT. Requires two-way RS-232 communication as noted. This format should always be used if it is possible to do so with the specific installation. Not applicable for GTX 33/33D.

Manufacturer	Model	Data Format	Interface Config	GTX 33/330 Config	GTX 3X5 Config	Notes
Garmin	GNS 480	RS-232	GTX + [1]	REMOTE [1]	REMOTE FMT 1 [1]	The primary purpose of this interface is transponder control; however, this format also includes GPS data. Refer to Table C-2 for more information.
			GTX w/TIS+ [2]	REMOTE + TIS [2]	REMOTE FMT 2 [2]	
			ADS-B OUT +	REMOTE	ADS-B + FMT 1	
	GTX 3X5	RS-232	ADS-B + FMT 1	REMOTE	N/A	
			ADS-B + FMT 2	N/A	ADS-B + FMT 2	
	GDL 88 with GPS/SBAS	ARINC 429	ARINC 743A	ARINC 743A	N/A	Applicable to GTX 330 installations only.

Notes:

[1] Installations with no TIS.

[2] Installations with TIS (GTX 335 only).

[3] Installations with GDU software v15.00 or later.

[4] Installations with GDU software prior to v15.00.

C.3 Altitude Source

Air data computers not listed below can still be approved under this STC if **all** of the following conditions are met:

1. The air data computer provides the following labels:
   - 203 – Pressure Altitude
   - 204 – Barometric-Corrected Altitude
   - 210 – True Airspeed
2. The interface check for the altitude encoder described in Section 8 must be successfully completed.
3. The installation of the air data computer was previously FAA-approved.
4. The air data computer is TSO-approved.
5. The connections to the GTX must utilize shielding wiring of the type specified in this manual. Shields must be terminated on the GTX side to connector shield block ground and on the air data computer side in accordance with the air data computer installation data. If the air data computer installation data does not specify a shielding method, then terminate the shield at the air data computer using the guidelines provided in Section 5.

Table C-4 Altitude Sources

Manufacturer	Model	Configuration Parameter	Interfacing Equipment Configuration	GTX 33/330 Configuration Setting	GTX 335 Config Setting	GTX 345 Config Setting	Notes
Garmin	G950/G1000	RS-232	Refer to the G950/G1000 section in Table C-2 for configuration.	N/A	Refer to the G950/G1000 section in Table C-2 for configuration.	Refer to the G950/G1000 section in Table C-2 for configuration.	The Altitude data is provided to the GTX over the RS-232 control interface.
	GDC 74( )	ARINC 429	N/A	ADC w/ALT (Speed: LOW)	ADC (Speed: LOW)		
	GDU 620	ARINC 429	GENERAL PURPOSE 1 (Speed: HIGH)	N/A	EFIS AIR DATA (Speed: HIGH)		Applicable to GTX 3X5 installations only. Note that this interface also provides heading data. Refer to Table C-6 for more information. This interface is not necessary if a GTX 345 is connected via HSDB.
	GDU 700/1060	ARINC 429	GENERAL PURPOSE 2 Speed: Low (GTX 33/330 only) High (GTX 3X5 only)	EFIS w/ALT (Speed: Low)	EFIS AIR DATA (Speed: High)		This interface is not necessary if a GTX 345 is connected via HSDB.

Manufacturer	Model	Configuration Parameter	Interfacing Equipment Configuration	GTX 33/330 Configuration Setting	GTX 335 Config Setting	GTX 345 Config Setting	Notes
Garmin	GTN 6XX/7XX	RS-232	GTX Mode S+ [1] **or** GTX w/TIS+ [2]	REMOTE	REMOTE FMT 1 [1] (or) REMOTE FMT 2 [2]		This configuration is primarily for purposes of transponder remote control; however, this configuration also provides altitude data. Refer to Table C-2 for more information.
	GAE	Configuration Module Port	N/A	N/A	Garmin Altitude Encoder: Present		Applicable to GTX 3X5 installations only.
	GTX 3X5	RS-232	ALT FMT 1	ICARUS ALT 25ft	ALT FMT 1 25ft		
	GAD 29(B)	ARINC 429	EFIS/AIRDATA 1 [3] EFIS/AIRDATA 2 [4]	N/A	EFIS AIR DATA (Speed: LOW)		Refer to *G5 Part 23 AML STC Installation Manual* (P/N 190-01112-10) for additional interfaces and configurations.
	GI 275	RS-232 or ARINC 429	General Purpose RS-232 Out: Altitude Format 3 (select port)	SHADIN ALT	SHADIN ALT	SHADIN ALT	This interface is not necessary for GTX 345 connected via HSDB.
ACK Tech	A-30	RS-232	N/A	ICARUS ALT	ALT FMT 1 25ft		Mod 8 or higher.
B & D	90004-003	ARINC 429	N/A	ADC w/ALT (Speed: LOW)	ADC (Speed: LOW)		
Honeywell (Bendix/King)	KDC 281	ARINC 429	N/A	ADC w/ALT (Speed: LOW)	ADC (Speed: LOW)		
	KDC 481	ARINC 429	N/A	ADC w/ALT (Speed: LOW)	ADC (Speed: LOW)		
Icarus Instruments	3000	RS-232	N/A	ICARUS ALT	ALT FMT 1 100ft		
Insight	TAS 1000	RS-232	N/A	FADC W/ALT	N/A		
Sandia	SAE 5-35	RS-232	N/A	ICARUS ALT	ALT FMT 1 25ft		Either RS-232 or Gillham Gray code format can be used to provide altitude data from the Sandia SAE 5-35 to the GTX 3X5.
		Gillham Gray Code	N/A	ICARUS ALT	Gillham Discrete ON		

Manufacturer	Model	Configuration Parameter	Interfacing Equipment Configuration	GTX 33/330 Configuration Setting	GTX 335 Config Setting	GTX 345 Config Setting	Notes
Shadin	8800T	RS-232	25ft or lower encoding	SHADIN ALT	ALT FMT 3 25ft		Applicable to installations with the 8800T unit configured for 25ft or lower encoding.
			100ft encoding		ALT FMT 3 100ft		Applicable to installations with the 8800T unit configured for parallel Gray source or 100ft encoding.
	F/ADC-200	RS-232	N/A	ADC w/ALT	ADC FMT 1		
	F/ADC-2000	RS-232	N/A	ADC w/ALT	ADC FMT 1		Either the RS-232 or ARINC 429 data format can be used for the Shadin F/ ADC-2000 interface to the GTX (not both).
		ARINC 429	N/A	ADC w/ALT (Speed: LOW)	ADC (Speed: LOW)		
Trans-Cal Industries	IA-RS232-X	RS-232	N/A	ADC w/ALT	ALT FMT 1 100ft		
	SSD120	RS-232	25ft or lower encoding	ADC w/ALT	ALT FMT 1 25ft		Applicable to installations with the SSD120 unit configured for 25ft or lower encoding.
			100ft encoding	ADC w/ALT	ALT FMT 1 100ft		Applicable to installations with the SSD120 unit configured for parallel Gray source or 100ft encoding.

Notes:

[1] Installation with no TIS traffic.

[2] Installation with TIS traffic (GTX 335 only).

[3] Use this format when a Garmin autopilot is installed.

[4] Use this format when a third-party autopilot is installed.

C.4 Radar Altimeters

Table C-5 Radar Altimeters

Manufacturer	Model	Data Format	Interface Config	GTX 33/330 Config	GTX 3X5 Config	Notes
Free Flight	RA-4500	ARINC 429	N/A	EFIS W/ALT	RADIO ALTITUDE	
Garmin	GRA 55/5500	ARINC 429	N/A	EFIS W/ALT	RADIO ALTITUDE	
Honeywell (Bendix/King)	KRA 405B	ARINC 429	N/A	EFIS W/ALT	RADIO ALTITUDE	

C.5 Heading Source

Table C-6 Heading Sources

Manufacturer	Model	Configuration Parameter	Interfacing Equipment Configuration	GTX 33/330 Configuration Setting	GTX 335 Configuration Setting	GTX 345 Configuration Setting	Notes
Garmin	G950/G1000	ARINC 429	GEN PURPOSE	N/A	N/A	EFIS AIR DATA [3] (Speed: HIGH)	Required for G950/G1000 to GTX 345 installations to display traffic. Provides true heading to GTX.
	GRS 77	ARINC 429	N/A	AHRS [2] (Speed: HIGH)	AHRS [2] (Speed: HIGH)		
	GAD 42	ARINC 429	N/A	N/A	HEADING [1] (Speed: LOW)		Applicable to GTX 3X5 installations only.
	GDU 620	ARINC 429	GENERAL PURPOSE 1	N/A	EFIS AIR DATA [3] (Speed: HIGH)		Applicable to GTX 3X5 installations only. Note that this interface also provides altitude data. Refer to Table C-4 for more information. This interface is not necessary if a GTX 345 is connected via HSDB.
	GDU 700/ 1060	ARINC 429	GENERAL PURPOSE 2 Speed: Low (GTX 33/330 only) High (GTX 345 only)	EFIS w/ALT (Speed: Low)	EFIS AIR DATA (Speed: High)		This interface is not necessary if a GTX 345 is connected via HSDB.
	GTN 6XX/7XX	RS-232	GTX Mode S+ [4] or GTX w/TIS+ [5]	REMOTE	REMOTE FMT [4] or REMOTE FMT [5]		This configuration is primarily for purposes of transponder remote control; however, this configuration also provides heading data. Refer to Table C-2.
	GNS 400W/ 500W	ARINC 429	ARINC 429	N/A	HEADING [1] (Speed: HIGH)		Applicable to GTX 3X5 installations only.
	GAD 29(B)	ARINC 429	EFIS/AIRDATA 1 [7] EFIS/AIRDATA 2 [8]	N/A	EFIS AIR DATA (Speed: LOW)		Refer to G5 Part 23 AML STC Installation Manual (P/N 190-01112-10) for additional interfaces and configurations.
Aspen	EFD1000	ARINC 429	N/A	N/A	HEADING [1] (Speed: LOW)		Applicable to GTX 3X5 installations only.

Manufacturer	Model	Configuration Parameter	Interfacing Equipment Configuration	GTX 33/330 Configuration Setting	GTX 335 Configuration Setting	GTX 345 Configuration Setting	Notes
Avidyne	EXP5000 700-00006-()	ARINC 429	N/A	N/A	HEADING [1] (Speed: LOW)		Applicable to GTX 3X5 installations only.
Collins	AHC-85E	ARINC 429	N/A	AHRS [2] (Speed: HIGH)	AHRS [2] (Speed: HIGH)		
Honeywell (Bendix/King)	EFIS 40/50 (SG 465)	ARINC 429	N/A	N/A	HEADING [1] (Speed: LOW)		Applicable to GTX 3X5 installations only.
Sandel	SN3500	ARINC 429	N/A	AHRS [2] (Speed: LOW)	AHRS [2] (Speed: LOW)		
	SN3308	ARINC 429	N/A	AHRS [2] (Speed: LOW)	AHRS [2] (Speed: LOW)		

Notes:

[1] Heading information only.

[2] Attitude and heading information.

[3] Altitude, airspeed, altitude rate, and heading information.

[4] Installation with no TIS traffic.

[5] Installation with TIS traffic (GTX 335 only).

[6] Configuration for GTX 33/330 and GTX 335 units only.

[7] Use this format when a Garmin autopilot is installed.

[8] Use this format when a third-party autopilot is installed.

C.6 Audio Panels

Table C-7 Audio Panels

Manufacturer	Model	Data Format	GTX 33/330 Configuration Setting	GTX 3X5 Configuration Setting
Garmin	SL10 SL10MS SL10M SL10S SL15 SL15M GMA 1347 (G950/G1000) GMA 1347D (G950/G1000) GMA 340 GMA 342 GMA 345 GMA 347 GMA 35 GMA 350	Analog Audio	N/A	Audio: XPDR
Honeywell (Bendix/King)	KMA 24 KMA 24H-70/71 KMA 26 DMA 28			
PS Engineering	PMA 6000 PMA 7000 Series PMA 8000 Series			

C.7 ADS-B Traffic and Weather Display

Table C-8 Traffic and Weather Displays - GTX 345

Manufacturer	Model	Data Format	Interface Config	GTX 345 Config	Notes
Garmin	GTN 6XX/7XX	HSDB	ADS-B In Source: GTX	Navigator - Enabled	
	GPS 175/GNC 355	HSDB	ADS-B In Source: GTX	Navigator - Enabled	
	GNS 400W/500W [3]	RS-232	ADSB TFC	GNS	Supports traffic only (also includes GPS data from the GNS 400W/500W).
			ADSB TFC WX	GNS	Supports both traffic and weather (also includes GPS data from the GNS 400W/500W).
		ARINC 429	ADSB TFC	TRAFFIC	Supports ADS-B traffic without TAS/TCAS.
			ADSB TFC w/TCAS	TRAFFIC	Supports ADS-B traffic w/ TAS/TCAS correlation.
	G950/G1000 [4]	RS-232	GDL 90	LGCY TRAFFIC	Supports GTX 345R installations only (GDL 90 format ADS-B traffic).
		RS-422 [5]	GDL 90 ADS-B	Garmin MX Format 3 [1] **or** Off [2]	Supports GTX 345R installations only (FIS-B weather).
	GMX 200	RS-422	FIS Data Link: Enabled GDL 90 UAT Radio: Display Only GDL 90 Code Edit: Disabled UAT Source: Port 4	MX Format 1	The GMX 200 does not display correlated traffic. If a combined ADS-B In and TAS/TCAS system is installed in the aircraft, an additional approved display must provide the correlated picture. Refer to AC 20-172B Appendix C.
	GDU 620 [6]	HSDB	Traffic/ADS-B: GTX ADS-B #( ) +TAS/TCAS/TCAD: Enabled (only if GTX 345 is correlating external traffic in accordance with Table C-10)	G500/G600: Present	The GTX ADS-B number must be set to the GTX that is configured to ADS-B In processing. Refer to the G500/G600 installation manual for more information.
	GDU 700/1060 [6]	HSDB	ADSB: GTX 345	G500/G600: Present	
	GI 275	HSDB	Traffic: Type: ADS-B Interface: GTX 345	SFD: Present	
UPSAT	MX20	RS-422	FIS Data Link: Enabled GDL 90 UAT Radio: Display Only GDL 90 Code Edit: Disabled UAT Source: Port 4	MX Format 2	The MX 20 does not display correlated traffic. If a combined ADS-B In and TAS/TCAS system is installed in the aircraft, an additional approved display must provide the correlated picture. Refer to AC 20-172B Appendix C.

Notes:

[1] If GDU software v12.00 or later and GIA software v6.20 or later is used.

[2] If GDU software prior to v12.00 or GIA software prior to v6.20 is used.

[3] The GNS 400W/500W display of FIS-B weather data requires one RS-232 interface. The display of ADS-B traffic with or without TAS/TCAS correlation requires one ARINC 429 interface. The display of ADS-B traffic with TAS/TCAD correlation and TAS/TCAD controls (Standby and Test) requires the combination of one RS-232 and one ARINC 429 interface.

[4] Audio Cancel, P3251-37 on the GTX 345R unit must be configured if an active traffic system is interfaced.

[5] Weather data is not available on GDU SW versions prior to v12.00. METARs/TAFs are not available on GDU SW v13.00 through v13.07. NEXRAD is not available on GDU SW v14.00 through v14.04 and v15.00 through v15.11.

[6] This interface also provides altitude and heading data to the GTX 345.

C.8 TIS-A Traffic Display

Table C-9 TIS-A Traffic Display - GTX 33/330 and GTX 335

Manufacturer	Model	Data Format	Interface Config	GTX 33/330 Config	GTX 335 Config	Notes
Garmin	GTN 6XX/7XX	RS-232	GTX w/TIS+	REMOTE + TIS	REMOTE FMT 2	Note that the primary purpose of this interface is for remote control; however, this format also includes TIS-A data. Refer to Table C-2 for more information.
	GDU 620	ARINC 429	GTX 330	GARMIN w/TIS	FORMAT 8	
	GDU 700/1060	ARINC 429	Traffic: GTX 33/330/335	GARMIN w/TIS	FORMAT 8	
	GNS 400W/500W	ARINC 429	GARMIN GTX 330	GARMIN w/TIS	FORMAT 8	Does not include controls for GTX.
	GNS 480	RS-232	GTX w/TIS+	REMOTE + TIS	REMOTE FMT 2	Note that the primary purpose of this interface is for remote control: however, this format also includes TIS-A data. Refer to Table C-2 for more information.
	G950/G1000	RS-232	GTX 33 w/TIS [1] **or** GTX 33ES w/TIS [2]	N/A	REMOTE FMT 2 [3] **or** LGCY REMOTE 2 [4]	Note that the primary purpose of this interface is for remote control: however, this format also includes TIS-A data. Refer to Table C-2 for more information.
	GMX 200	ARINC 429	GTX 330	GARMIN w/TIS	FORMAT 8	Does not include controls for GTX.
	GI 275	RS-232 or ARINC 429	Traffic: Type: TIS-A Interface: GTX 3XX			

Notes:

[1] GDU software prior to v9.10.

[2] GDU software v9.10 or later.

[3] GDU software v15.00 or later.

[4] GDU software prior to v15.00.

C.9 Traffic Sensors

Table C-10 Traffic Sensors

Manufacturer	Model	Configuration Parameter	GTX 345 Input/Output	Interfacing Equipment Configuration	GTX 345 Configuration Setting	Notes
Garmin	GTS 8XX	ARINC 429	Input	Traffic Display Destination (Primary TX) [1]	TRAFFIC 1 (Speed - HIGH)	
			Output [2]	Pressure Altitude Source (Primary RX); Magnetic Heading Source (Primary RX); GPS Position/Velocity/Time Source (Primary RX); Transponder 1 Communication (Primary RX) [1]	FORMAT 5 (Speed - HIGH)	Data format includes Garmin TAS as well as Garmin concentrator. Required for G1000. GTS 8X5 system SW v2.10 or later is required. GTS 8XX system SW v2.01 or later is required.
			N/A	Transponder 1 Communication (Primary TX) [1] (Speed - HIGH) [4]	N/A	Select a GTS 8XX TX channel that is NOT used because “Disabled” is not an option in the GTS 8XX Install Tool.
	GTS 8XX [5]	HSDB	N/A	ADS-B Receiver: Off AUDIO PATH: HSDB	GTS: PRESENT	Requires the following minimum software levels: • GTS Processor v3.12 (or later) • GTS 8X0 v4.12 (or later)
Honeywell (Bendix/King)	KTA 870/810 KMH 880/820 KTA 970/910 KMH 980/920	ARINC 429	Input	Controller - Discrete Intruder File Protocol - ARINC 735	TRAFFIC 5 (Speed - HIGH)	
L3 Comm [3]	SKY 497 SKY 899	ARINC 429	Input	N/A	TRAFFIC 2 (Speed - HIGH)	
Avidyne	RYAN TAS 600 (9900BX)	RS-232	Input/Output	N/A	TRAFFIC FMT 4	Configuration setting available on RS-232 Channel 4 only.

Notes:

[1] Configure the listed function(s) with the appropriate ARINC 429 channel based on the specific installation.

[2] ARINC 429 output from GTX 345 to GTS 800 is not required unless installed on G1000, but is required for all other GTS 8XX units.

[3] The minimum software version for the Sky 497 traffic system to interface to Garmin equipment is software v1.6.

[4] Refer to *GTS 820/850 STC Installation Manual Part 4* (P/N 190-00993-03) for more details.

[5] ARINC 429 and discrete connections between the GTX and GTS are not required when the HSDB interface is being used.

C.10 Bluetooth

Table C-11 Bluetooth

Manufacturer	Model	Data Format	Input/Output	GTX 345 Config	Notes
Garmin	Internal	Bluetooth	N/A	Bluetooth: Enabled	
	Flight Stream 110/210	RS-232	Input	CONNEXT FMT 3	Both the RS-232 input and RS-422 output are required; internal Bluetooth should be disabled on the GTX with a FS 110/210 installation. FS 110/210 software v2.40 or later required.
		RS-422	Output	CONNEXT FMT 3	

C.11 UAT Out Control

The interfaces in the table below allow a GTX 33/330 transponder to act as a control panel, providing squawk code, PABI, and other required ADS-B Out data to an interfaced UAT transmitter.

Table C-12 UAT Out Control

Manufacturer	Model	Data Format	Interface Config	GTX 33/330 Config	Notes
Garmin	GDL 84/88	RS-232	GTX Mode S	REMOTE	For installations where a GTX 33 transponder is controlled by a GTN that is also interfaced to a GDL 88 via HSDB, the RS-232 interface is not required. The GTX 33 will communicate indirectly with the GDL 88 through the GTN.

GARMIN